ROCKSTAR™
VERSAMATIC'S SOLIDS HANDLING SOLUTION

SPECIFICATIONS & PERFORMANCE

2” (50 mm) Solids Handling Plastic Flap Pump
with Plastic Center Sections

PERFORMANCE

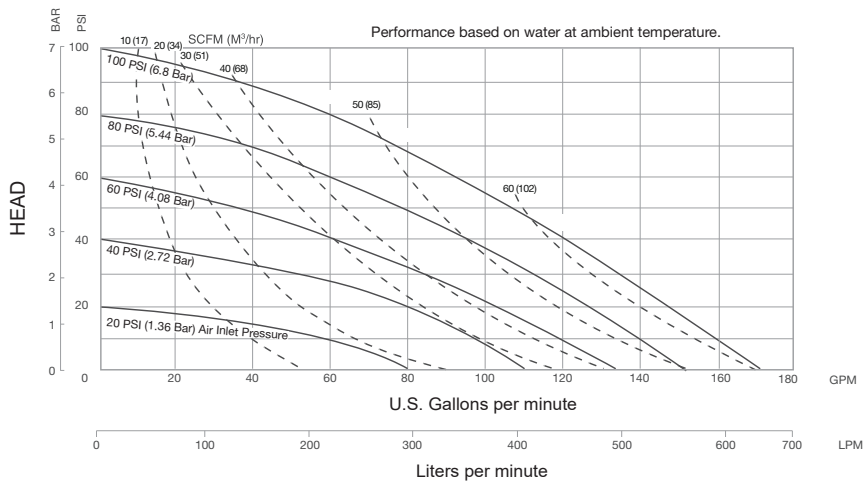

CAPACITY

NOTE: Performance based on the following: elastomeric fitted pump, flooded suction, water at ambient conditions. The use of other materials and varying hydraulic conditions may result in deviations in excess of 5%.

SPECIFICATIONS

Flow Rate
Adjustable to . . . 0-170 gpm (644 lpm)
Port Size - Suction / Discharge
. . . . . .2” ANSI 150 Class (DIN 50)
. . . . . 2” NPT (F)
. . . . . 2” BSPT (F)
Air Inlet . . . . . .3/4” NPT
Max Solid Size (Diameter)
. . . . . 1.8” (46 mm)
Weights
Pump: Polypropylene . 58 lbs. (27 kg)
Shipping: Polypropylene 70 lbs. (31 kg)

DIMENSIONS

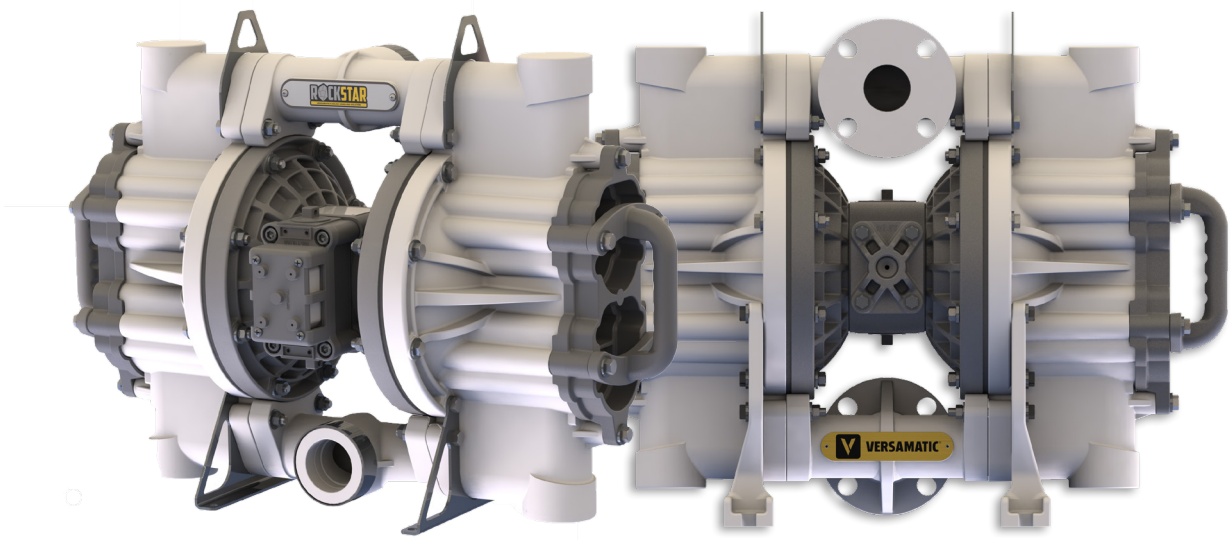

VERSAMATIC®

Warren Rupp, Inc. | A Unit of IDEX Corporation
800 North Main Street | Mansfield, OH 44902 USA
Phone: 419.526.7296 | Fax: 419.526.7289
VERSAMATIC.COM

Rockstar_Datasheet-rev0822

©Copyright 2022 Warren Rupp, Inc. All Rights Reserved.

VIPTech Distribution Germany & Austria: VIPTech GmbH · Lessingstraße 12 · 72663 Großbettlingen · Germany
Phone +49 7022 948735 · info@viptech.net · www.viptech.net · Shop & spare parts: aodd-pumpen.de

ROCKSTAR
VERSAMATIC'S SOLIDS HANDLING SOLUTION

SPECIFICATIONS & PERFORMANCE

2” (50 mm) Solids Handling Plastic Flap Pump
with Plastic Center Sections

DIMENSIONS

VMB20 Plastic Bolted Flap - Flanged Manifold

Dimensions in inches (metric dimensions in brackets)

The dimensions on this drawing are for reference only. A certified drawing can be requested if physical dimensions are needed.

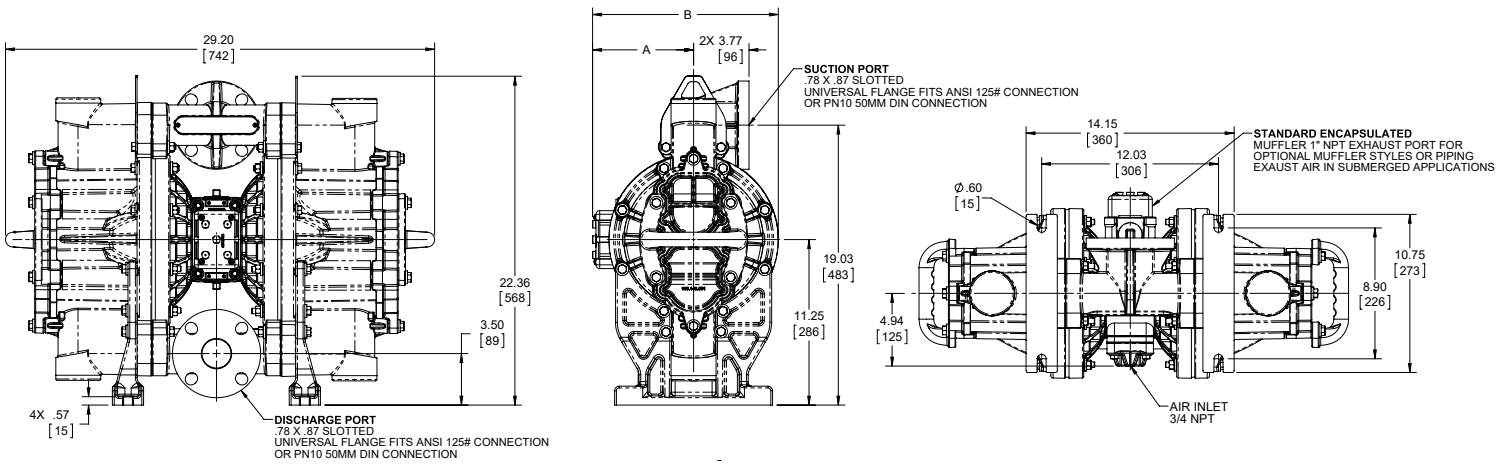

VMB20 Plastic Bolted Flap Non-Metallic

Dimensions in Inches [ ] in Millimeters. Dimensional tolerance: +/- 1/8" [ ] +/- 3mm

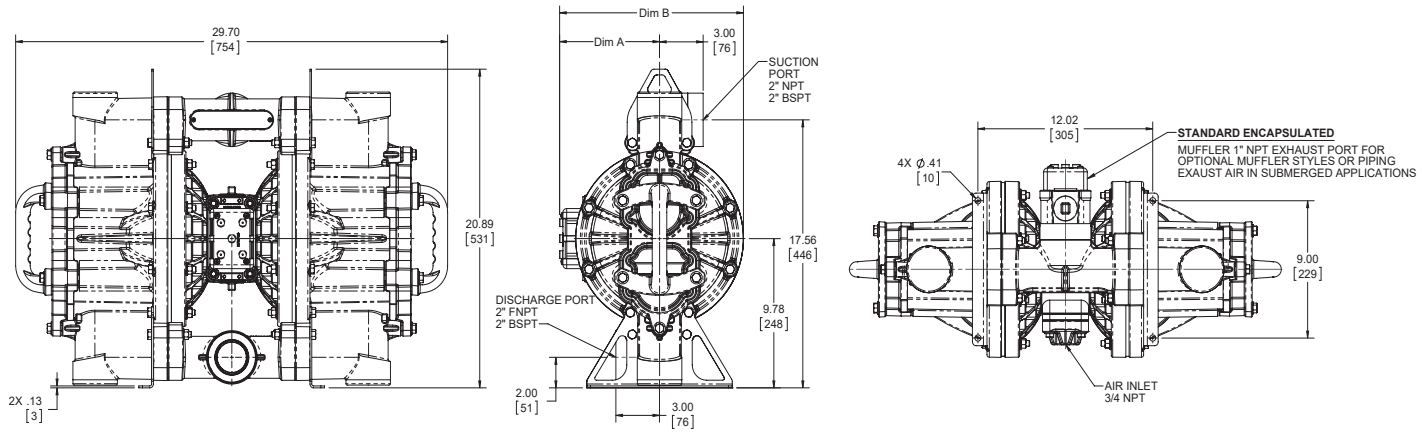

VERSAMATIC®

Warren Rupp, Inc. | A Unit of IDEX Corporation
800 North Main Street | Mansfield, OH 44902 USA
Phone: 419.526.7296 | Fax: 419.526.7289

VERSAMATIC.COM

Rockstar_Datasheet-rev0822

©Copyright 2022 Warren Rupp, Inc. All Rights Reserved.

VIPTech

Your partner for Versamatic AODD pumps

VM VMB Specialty Data Sheet

VIPTech GmbH
Lessingstraße 12
72663 Großbettlingen
Germany

Phone: +49 7022 948735
E-mail: info@viptech.net
Web: www.viptech.net
Online shop: aodd-pumpen.de

Sales, technical advice, spare parts and repair kits for Versamatic air-operated double diaphragm pumps - Germany and Austria.

aodd-pumpen.de

viptech.net

This document is the original manufacturer documentation (Warren Rupp, Inc. / Versamatic), supplemented with VIPTech contact details. Technical content unchanged.