2" Ultra-Matic Bolted
with Non-Metallic Center Section

U2

Performance

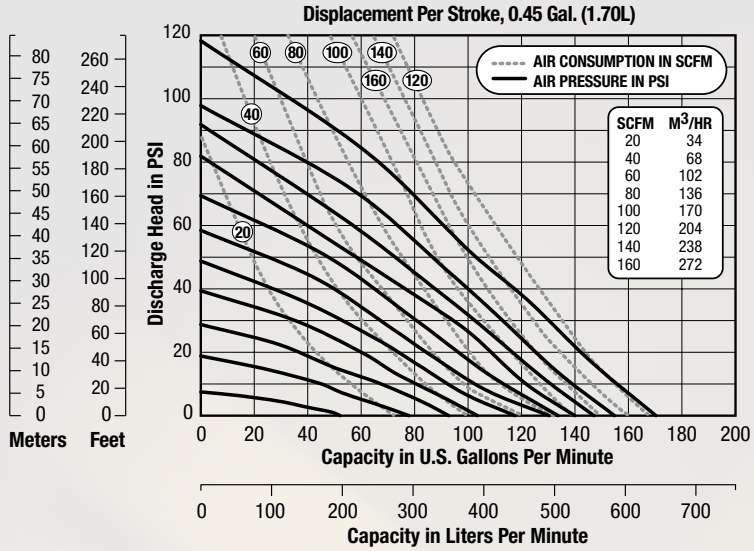

NOTE: Performance based on the following: elastomeric fitted pump, flooded suction, water at ambient conditions. The use of other materials and varying hydraulic conditions may result in deviations in excess of 5%.

Specifications

Flow Rate
Adjustable to . . . . . 0-170 gpm (644 lpm)
Port Size
Suction . . . . . 2" ANSI/DIN #50 Flange
Discharge . . . . . 2" ANSI/DIN #50 Flange
Air Inlet . . . . . 1/2" NPT
Air Exhaust . . . . . 3/4" NPT
Suction Lift (Dry)
Rubber . . . . . 20' (6.10 m)
PTFE . . . . . 10' (3.05 m)
Max Solid Size (Diameter)
. . . . . 7/16" (11.1 mm)
Shipping Weights
Cast Iron. . . . . 115 lbs (52 kg)
Hastelloy C. . . . . 123 lbs (56 kg)
Stainless Steel . . . . . 115 lbs (52 kg)

Dimensions

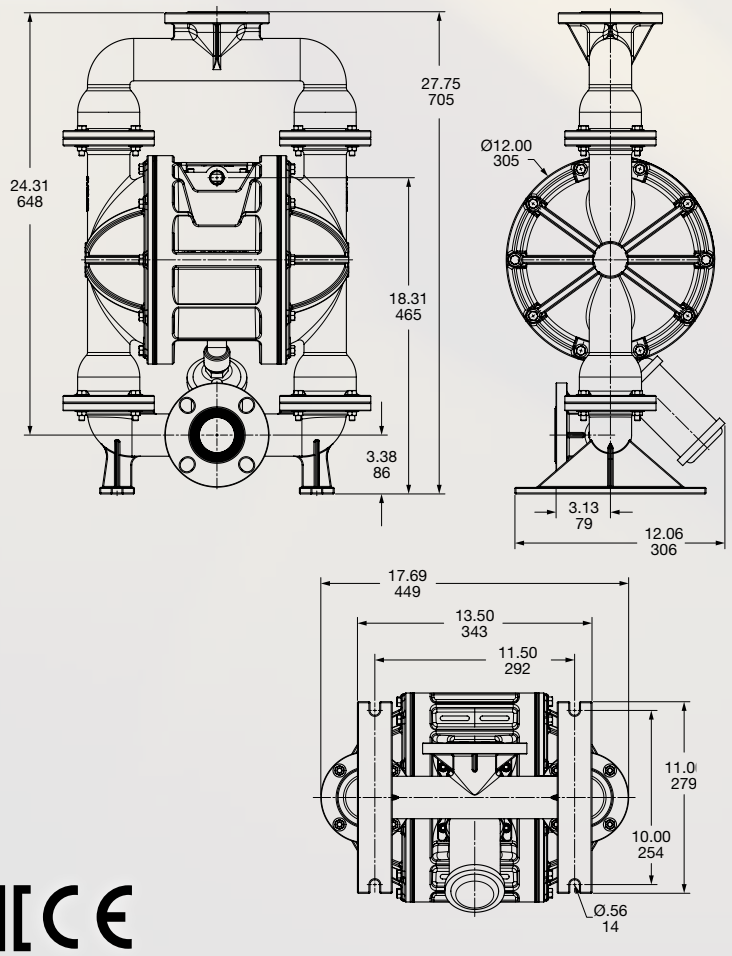



VERSA-MATIC®

Warren Rupp, Inc. • A Unit of IDEX Corporation
800 North Main Street, Mansfield, OH 44902 USA
Phone: 419.526.7296 • Fax: 419.526.7289 • www.versamatic.com

VIPTech Distribution Germany & Austria: VIPTech GmbH · Lessingstraße 12 · 72663 Großbettlingen · Germany
Phone +49 7022 948735 · info@viptech.net · www.viptech.net · Shop & spare parts: aodd-pumpen.de

VIPTech

Your partner for Versamatic AODD pumps

VM U2 Bolted-Metal Data Sheet

VIPTech GmbH
Lessingstraße 12
72663 Großbettlingen
Germany

Phone: +49 7022 948735
E-mail: info@viptech.net
Web: www.viptech.net
Online shop: aodd-pumpen.de

Sales, technical advice, spare parts and repair kits for Versamatic air-operated double diaphragm pumps - Germany and Austria.

aodd-pumpen.de

viptech.net

This document is the original manufacturer documentation (Warren Rupp, Inc. / Versamatic), supplemented with VIPTech contact details. Technical content unchanged.