E5 DATA SHEET

SPECIFICATIONS & PERFORMANCE

1/2” Bolted Metal – Food Processing

with Metal and Plastic Center Sections

PERFORMANCE

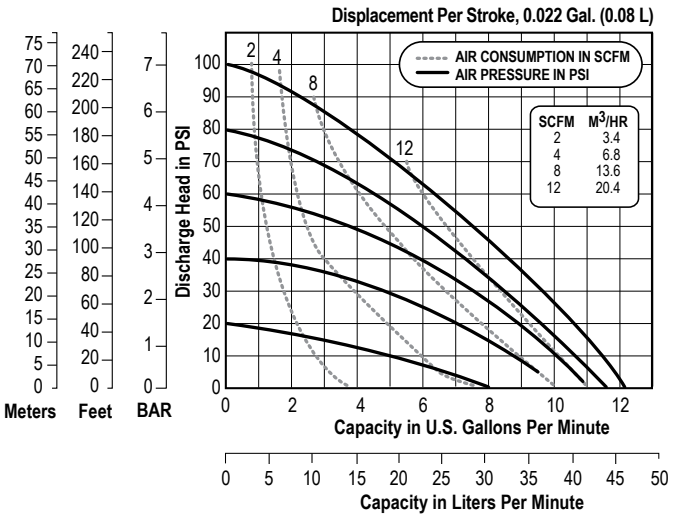

NOTE: Performance based on the following: elastomeric fitted pump, flooded suction, water at ambient conditions. The use of other materials and varying hydraulic conditions may result in deviations in excess of 5%.

SPECIFICATIONS

Flow Rate
Adjustable to . . 0-12 gpm (45.4 lpm)
Port Size
Suction . . . . . 1 1/2” Tri-Clamp
Discharge . . . . . 1 1/2” Tri-Clamp
Air Inlet . . . . . 3/8” NPT
Air Exhaust . . . . . 3/8” NPT
Suction Lift
Dry . . . . . 13’ (3.9 m)
Wet . . . . . 22’ (6.7 m)
Max Solid Size (Diameter)
. . . . . 1/16” (1.6 mm)
Max Noise Level . . . . . 84 dB(A)
Shipping Weights
Stainless . . . . . 17 lbs (7.7 kg)

DIMENSIONS

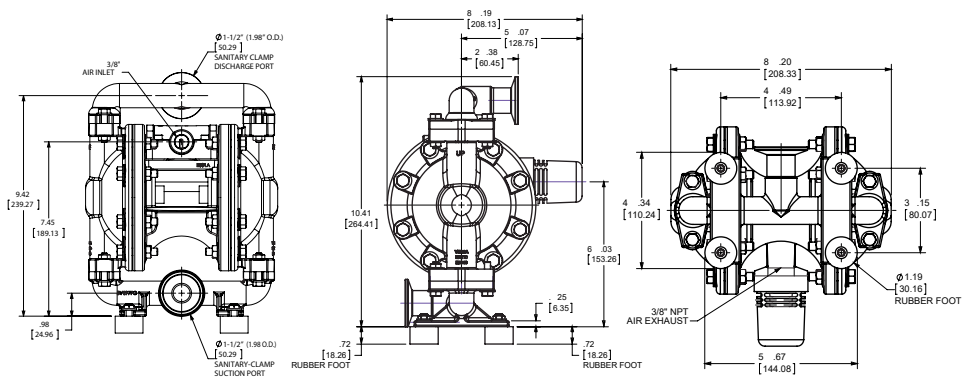

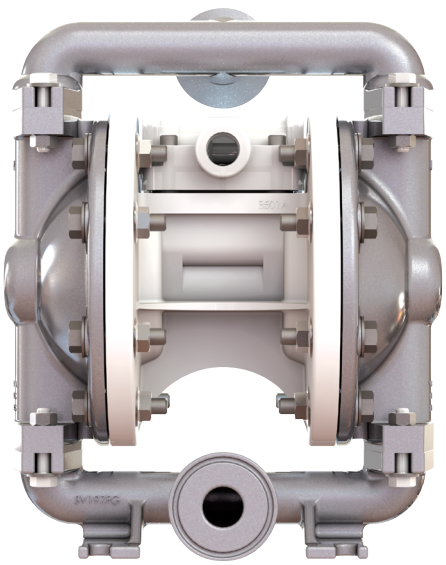

Warren Rupp, Inc. | A Unit of IDEX Corporation
800 North Main Street | Mansfield, OH 44902 USA
Phone: 419.526.7296 | Fax: 419.526.7289

VERSAMATIC.COM

e5mdlCdsFP-rev0519

©Copyright 2019 Warren Rupp, Inc. All Rights Reserved.

VIPTech Distribution Germany & Austria: VIPTech GmbH · Lessingstraße 12 · 72663 Großbettlingen · Germany
Phone +49 7022 948735 · info@viptech.net · www.viptech.net · Shop & spare parts: aodd-pumpen.de

VIPTech

Your partner for Versamatic AODD pumps

VM E5 Specialty FP Data Sheet

VIPTech GmbH
Lessingstraße 12
72663 Großbettlingen
Germany

Phone: +49 7022 948735
E-mail: info@viptech.net
Web: www.viptech.net
Online shop: aodd-pumpen.de

Sales, technical advice, spare parts and repair kits for Versamatic air-operated double diaphragm pumps - Germany and Austria.

aodd-pumpen.de

viptech.net

This document is the original manufacturer documentation (Warren Rupp, Inc. / Versamatic), supplemented with VIPTech contact details. Technical content unchanged.