# E4 DATA SHEET

## SPECIFICATIONS & PERFORMANCE

# 1 1/2” Bolted Metal

with Metal Center Section

## PERFORMANCE

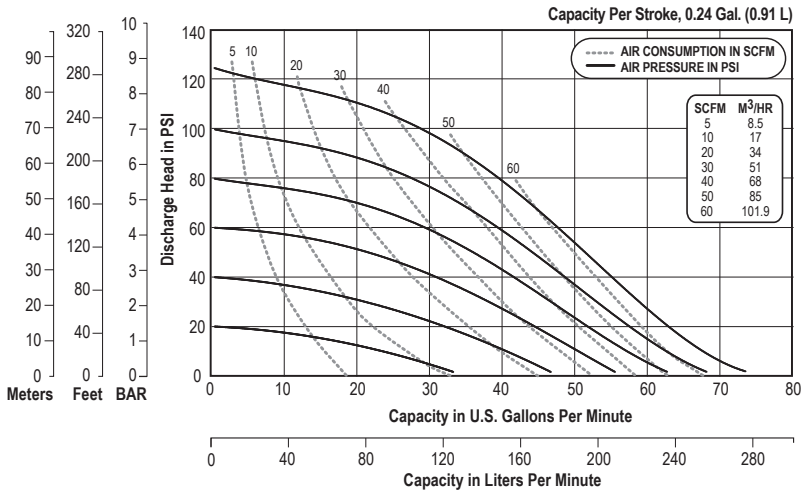


## SPECIFICATIONS

**Flow Rate**

Adjustable to . . .0-73 gpm (276 lpm)

**Port Size**

Suction . . . . . .1 1/2” Flange

Discharge . . . . . .1 1/2” Flange

**Air Inlet** . . 1/2” NPT (3/4” NPT on SS)

**Air Exhaust** . . . . . 3/4” NPT

**Suction Lift**

Dry . . . . . .15’ (4.6 m)

Wet . . . . . .25’ (7.6 m)

**Max Solid Size (Diameter)**

. . . . . .3/16” (4.76 mm)

**Shipping Weights**

Stainless Steel . . . . 65 lbs (29.5 kg)

**NOTE: Performance based on the following: elastomeric fitted pump, flooded suction, water at ambient conditions. The use of other materials and varying hydraulic conditions may result in deviations in excess of 5%.**

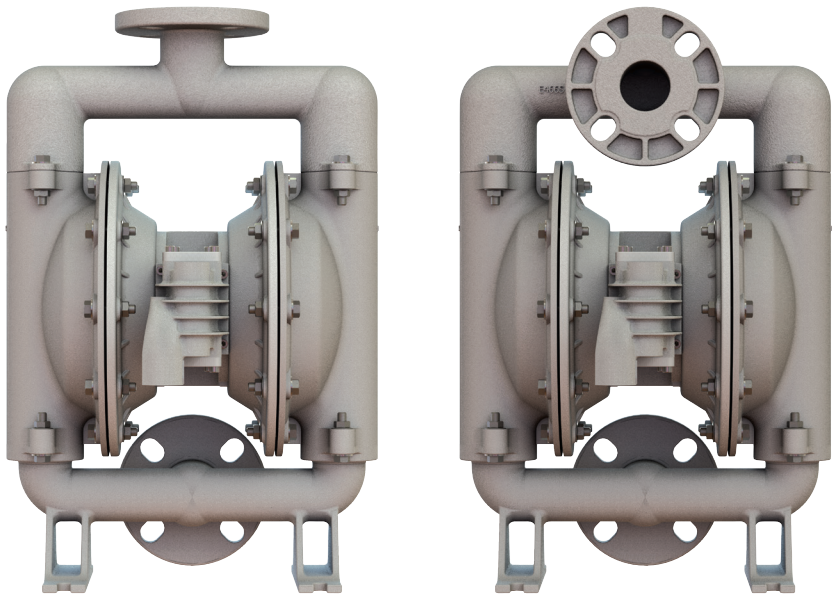

VERSAMATIC®


**Warren Rupp, Inc. | A Unit of IDEX Corporation**
**800 North Main Street | Mansfield, OH 44902 USA**
**Phone: 419.526.7296 | Fax: 419.526.7289**

**VERSAMATIC.COM**



e4mdlAdsATEXMB-rev0519



**©Copyright 2019 Warren Rupp, Inc. All Rights Reserved.**



VIPTech Distribution Germany & Austria: VIPTech GmbH · Lessingstraße 12 · 72663 Großbettlingen · Germany
Phone +49 7022 948735 · info@viptech.net · www.viptech.net · Shop & spare parts: aodd-pumpen.de

# E4 DATA SHEET

## SPECIFICATIONS & PERFORMANCE

**1 1/2” Bolted Metal**
with Metal Center Section

## DIMENSIONS

### E4 Bolted Metal (Horizontal Discharge)

Dimensions in inches (metric dimensions in brackets)

*The dimensions on this drawing are for reference only. A certified drawing can be requested if physical dimensions are needed.*

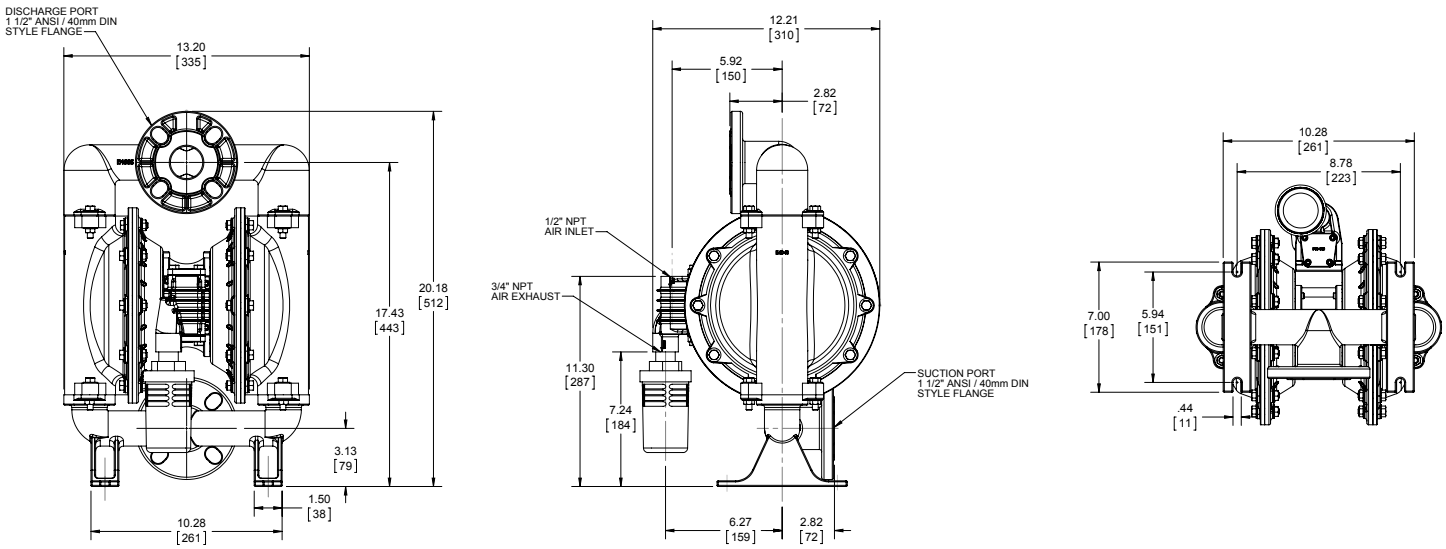


### E4 Bolted Metal (Vertical Discharge)

Dimensions in inches (metric dimensions in brackets)

*The dimensions on this drawing are for reference only. A certified drawing can be requested if physical dimensions are needed.*

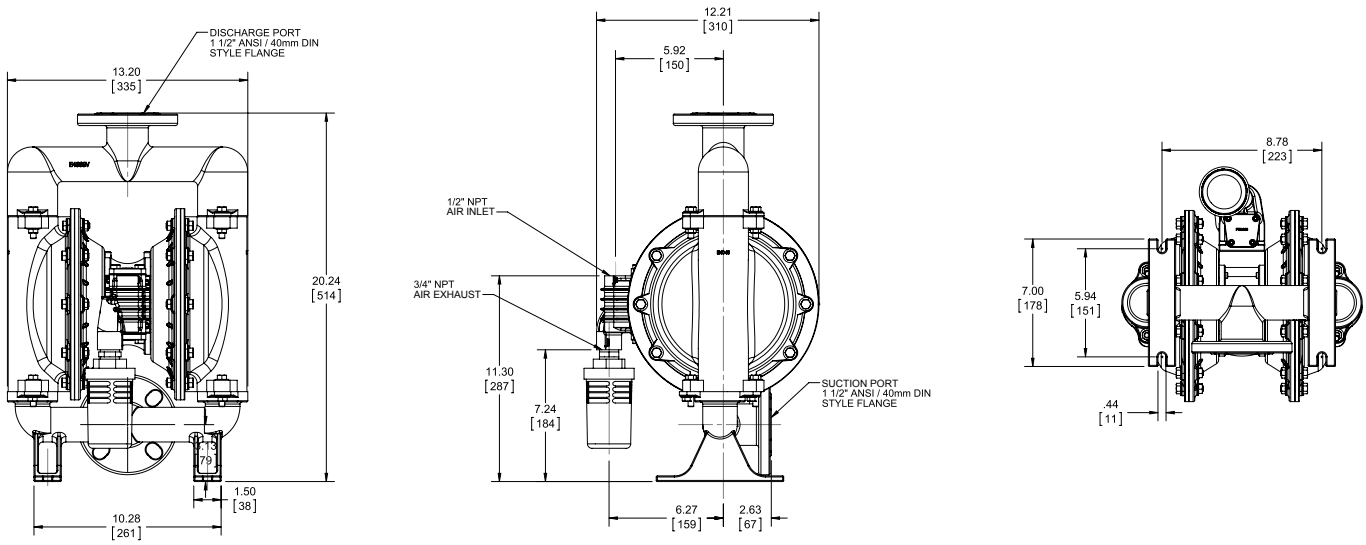


VERSAMATIC®


**Warren Rupp, Inc. | A Unit of IDEX Corporation**
**800 North Main Street | Mansfield, OH 44902 USA**
**Phone: 419.526.7296 | Fax: 419.526.7289**

VERSAMATIC.COM



e4mdlAdsATEXMB-rev0519



**©Copyright 2019 Warren Rupp, Inc. All Rights Reserved.**



VIPTech Distribution Germany & Austria: VIPTech GmbH · Lessingstraße 12 · 72663 Großbettlingen · Germany
Phone +49 7022 948735 · info@viptech.net · www.viptech.net · Shop & spare parts: aodd-pumpen.de

VIPTech

## Your partner for Versamatic AODD pumps

VM E4 Bolted-Metal Data Sheet

**VIPTech GmbH**
Lessingstraße 12
72663 Großbettlingen
Germany

Phone: +49 7022 948735
E-mail: info@viptech.net
Web: www.viptech.net
Online shop: aodd-pumpen.de

Sales, technical advice, spare parts and repair kits for Versamatic air-operated double diaphragm pumps - Germany and Austria.

aodd-pumpen.de

viptech.net

This document is the original manufacturer documentation (Warren Rupp, Inc. / Versamatic), supplemented with VIPTech contact details. Technical content unchanged.