E3 DATA SHEET

SPECIFICATIONS & PERFORMANCE

3" Bolted Metal

with Metal Center Section

PERFORMANCE

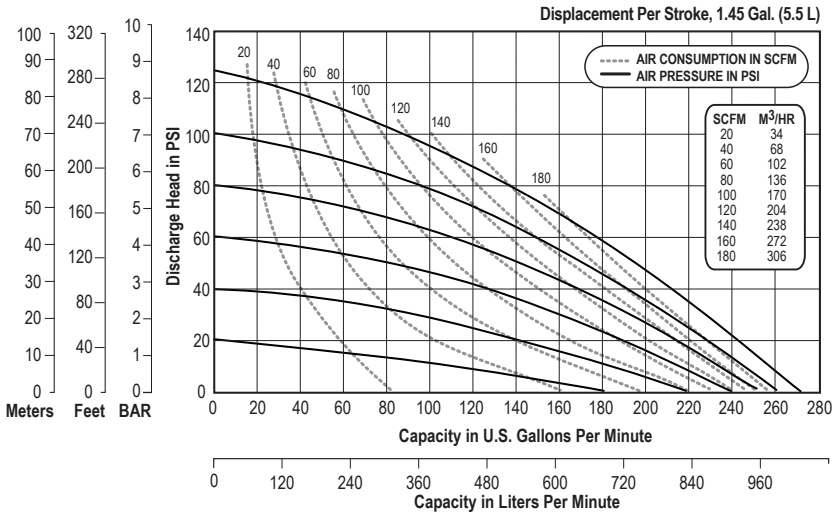

NOTE: *Performance based on the following: elastomeric fitted pump, flooded suction, water at ambient conditions. The use of other materials and varying hydraulic conditions may result in deviations in excess of 5%.*

SPECIFICATIONS

Flow Rate
Adjustable to 0-273 gpm (1,033 lpm)
Port Size
Suction . . . . . .
3" ANSI 150 lbs Class (DIN80)
Discharge . . . . . .
3" ANSI 150 lbs Class (DIN80)
Air Inlet . . . . . 1/2" NPT
Air Exhaust . . . . . .1" NPT
Suction Lift
Dry . . . . . .16' (4.9 m)
Wet . . . . . .31' (9.4 m)
Max Solid Size (Diameter)
. . . . . .3/8" (9.5 mm)
Max Noise Level . . . . . 93 dB(A)
Shipping Weights
Stainless . . . . . 245 lbs (111.1 kg)
** Stainless Center add 50 lbs. (22.7 kg)

DIMENSIONS

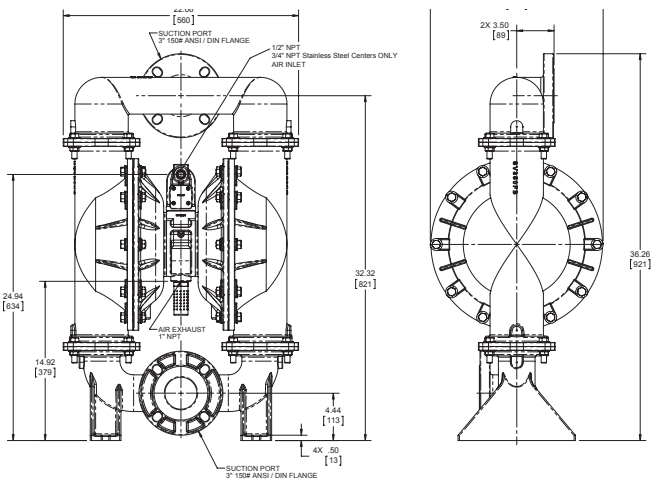

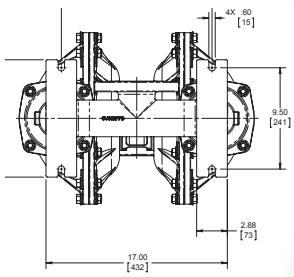

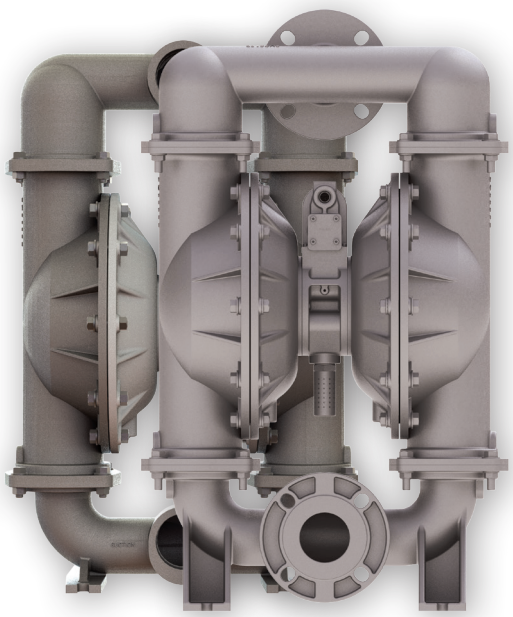

VERSAMATIC®

Warren Rupp, Inc. | A Unit of IDEX Corporation
800 North Main Street | Mansfield, OH 44902 USA
Phone: 419.526.7296 | Fax: 419.526.7289

VERSAMATIC.COM

e3mdlCdsATEXMB-rev0519

©Copyright 2019 Warren Rupp, Inc. All Rights Reserved.

VIPTech Distribution Germany & Austria: VIPTech GmbH · Lessingstraße 12 · 72663 Großbettlingen · Germany
Phone +49 7022 948735 · info@viptech.net · www.viptech.net · Shop & spare parts: aodd-pumpen.de

E3 DATA SHEET

SPECIFICATIONS & PERFORMANCE

3” Bolted Metal

with Metal Center Section

DIMENSIONS

E3 Bolted Metal

Dimensionally Interchangeable with Versamatic Clamped Pumps

Dimensions in inches (metric dimensions in brackets). Dimensional Tolerance .125" (3mm).

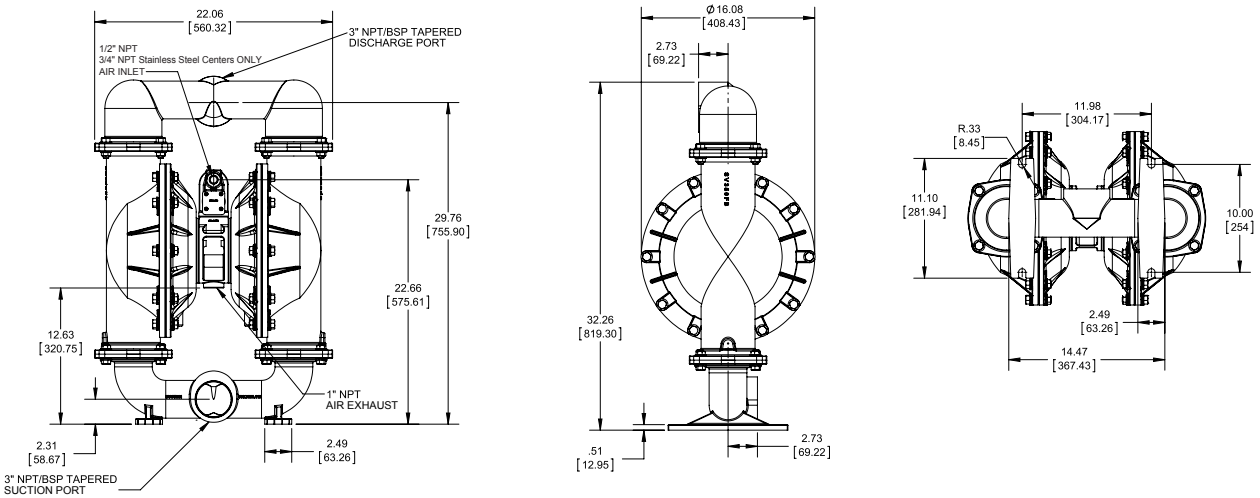

E3 Bolted Metal

Dimensionally Interchangeable with Wilden Clamped Pumps

Dimensions in inches (metric dimensions in brackets). Dimensional Tolerance .125" (3mm).

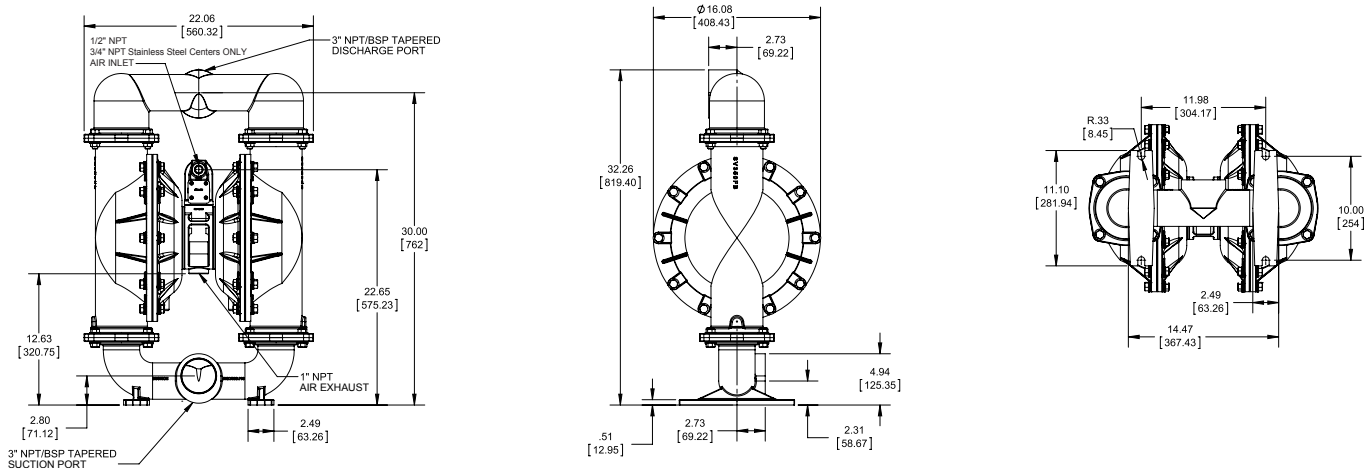

VERSAMATIC®

Warren Rupp, Inc. | A Unit of IDEX Corporation
800 North Main Street | Mansfield, OH 44902 USA
Phone: 419.526.7296 | Fax: 419.526.7289

VERSAMATIC.COM

e3mdlCdsATEXMB-rev0519

©Copyright 2019 Warren Rupp, Inc. All Rights Reserved.

VIPTech Distribution Germany & Austria: VIPTech GmbH · Lessingstraße 12 · 72663 Großbettlingen · Germany
Phone +49 7022 948735 · info@viptech.net · www.viptech.net · Shop & spare parts: aodd-pumpen.de

VIPTech

Your partner for Versamatic AODD pumps

VM E3 Bolted-Metal Edelstahl ATEX Data Sheet

VIPTech GmbH
Lessingstraße 12
72663 Großbettlingen
Germany

Phone: +49 7022 948735
E-mail: info@viptech.net
Web: www.viptech.net
Online shop: aodd-pumpen.de

Sales, technical advice, spare parts and repair kits for Versamatic air-operated double diaphragm pumps - Germany and Austria.

aodd-pumpen.de

viptech.net

This document is the original manufacturer documentation (Warren Rupp, Inc. / Versamatic), supplemented with VIPTech contact details. Technical content unchanged.