E2 DATA SHEET

SPECIFICATIONS & PERFORMANCE

2” Flap Bolted Plastic

with Plastic Center Sections

PERFORMANCE

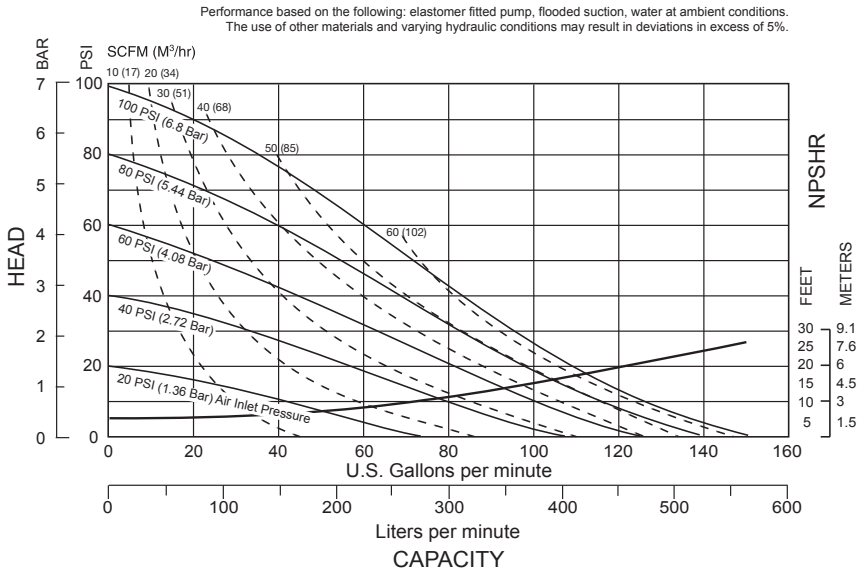

NOTE: Performance based on the following: elastomeric fitted pump, flooded suction, water at ambient conditions. The use of other materials and varying hydraulic conditions may result in deviations in excess of 5%.

DIMENSIONS

SPECIFICATIONS

Flow Rate

Adjustable to . . . 0-150 gpm (567 lpm)

Port Size - Suction / Discharge

. . . . . .2” ANSI 150 Class (DIN 50)

. . . . . 2” NPT (F)

. . . . . 2” BSPT (F)

Air Inlet . . . . . .3/4” NPT

Air Exhaust . . . . . .

Standard Encapsulated, 1” NPT Optional

Suction Lift

Dry:

Elastomer . . . . . 19’ (5.8 m)

Santoprene . . . . . 15’ (4.6 m)

Wet . . . . . 24’ (7.3 m)

Max Solid Size (Diameter)

. . . . . 1.8” (46 mm)

Max Noise Level 91dB

Weights

Pump: Polypropylene . 53 lbs. (24 kg)

Shipping: Polypropylene 71 lbs. (31.8 kg)



VERSAMATIC®

Warren Rupp, Inc. | A Unit of IDEX Corporation
800 North Main Street | Mansfield, OH 44902 USA
Phone: 419.526.7296 | Fax: 419.526.7289

VERSAMATIC.COM

e2nmCdsATEX-rev0321

©Copyright 2021 Warren Rupp, Inc. All Rights Reserved.

VIPTech Distribution Germany & Austria: VIPTech GmbH · Lessingstraße 12 · 72663 Großbettlingen · Germany
Phone +49 7022 948735 · info@viptech.net · www.viptech.net · Shop & spare parts: aodd-pumpen.de

E2 DATA SHEET

SPECIFICATIONS & PERFORMANCE

2” Flap Bolted Plastic

with Plastic Center Sections

DIMENSIONS

E2 Plastic Bolted Flap - Flanged Manifold

Dimensions in inches (metric dimensions in brackets)

The dimensions on this drawing are for reference only. A certified drawing can be requested if physical dimensions are needed.

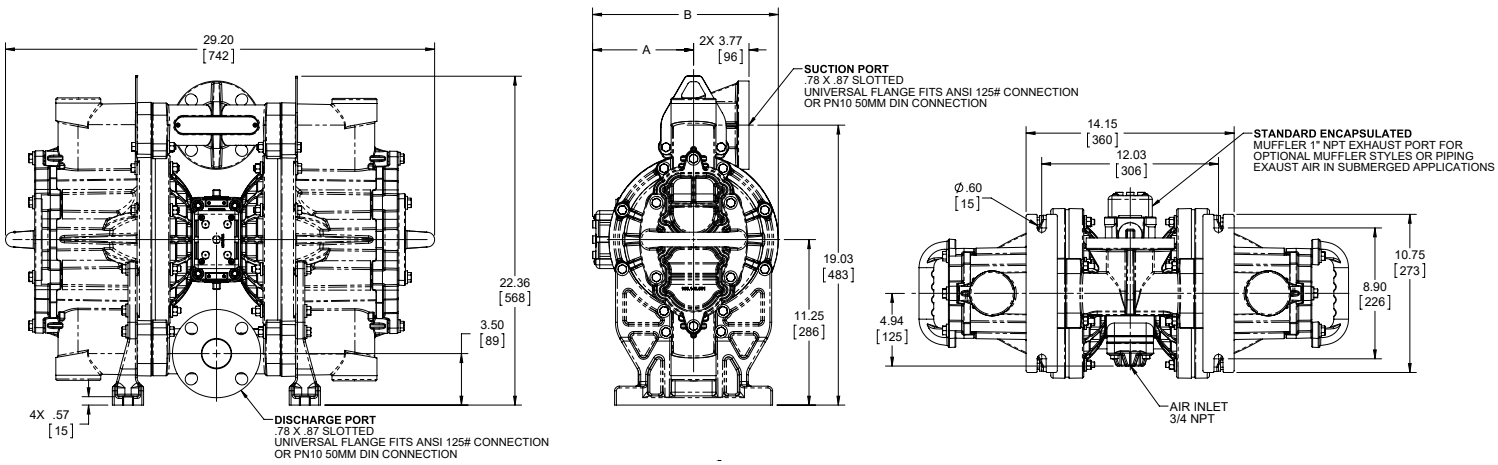

E2 Plastic Bolted Flap Non-Metallic

Dimensions in Inches [ ] in Millimeters. Dimensional tolerance: +/- 1/8" [ ] +/- 3mm

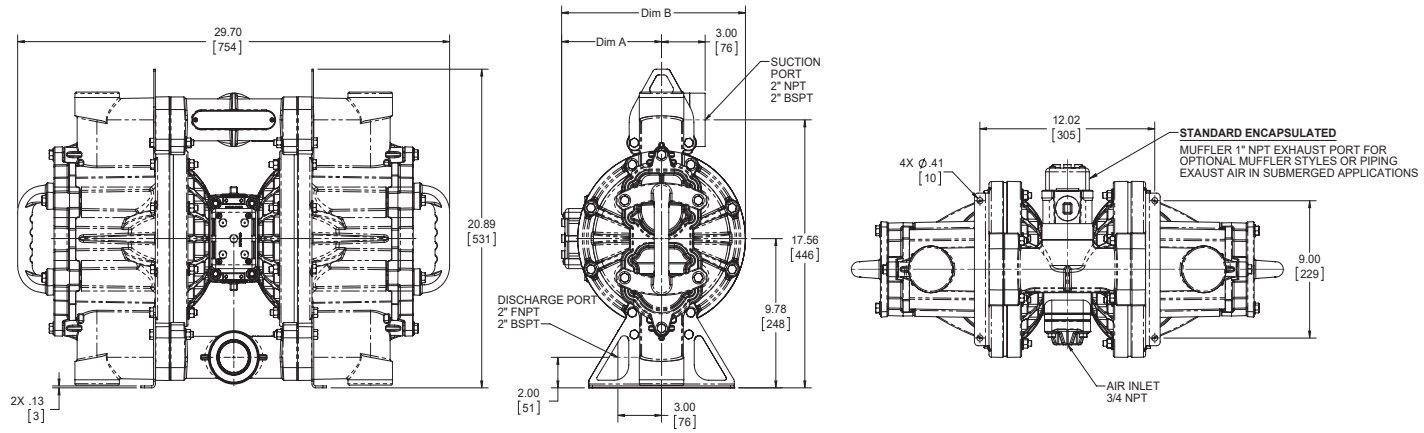

VERSAMATIC®

Warren Rupp, Inc. | A Unit of IDEX Corporation
800 North Main Street | Mansfield, OH 44902 USA
Phone: 419.526.7296 | Fax: 419.526.7289

VERSAMATIC.COM

e2nmCdsATEX-rev0321

©Copyright 2021 Warren Rupp, Inc. All Rights Reserved.

VIPTech

Your partner for Versamatic AODD pumps

VM E2 Specialty F Data Sheet

VIPTech GmbH
Lessingstraße 12
72663 Großbettlingen
Germany

Phone: +49 7022 948735
E-mail: info@viptech.net
Web: www.viptech.net
Online shop: aodd-pumpen.de

Sales, technical advice, spare parts and repair kits for Versamatic air-operated double diaphragm pumps - Germany and Austria.

aodd-pumpen.de

viptech.net

This document is the original manufacturer documentation (Warren Rupp, Inc. / Versamatic), supplemented with VIPTech contact details. Technical content unchanged.