SERVICE&OPERATINGMANUAL

ORIGINAL INSTRUCTIONS

E7

3/4" Elima-Matic Bolted Metal - ATEX

with Metal Center Sections

E7 Metal Pumps

• Aluminum

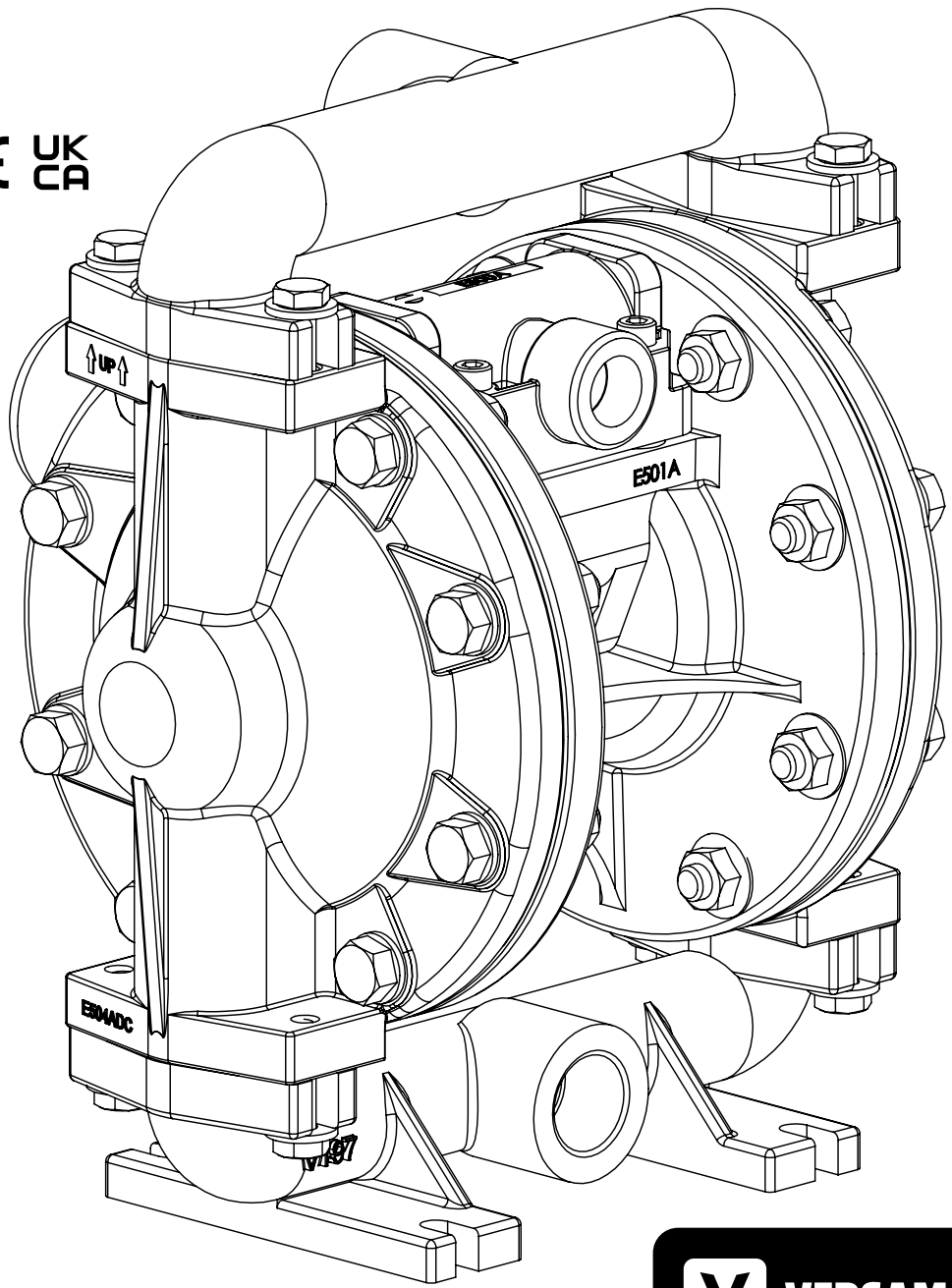

VERSAMATIC®

VERSAMATIC®
Warren Rupp, Inc. • A Unit of IDEX Corporation

800 North Main Street, Mansfield, OH 44902 USA
Phone: (419) 526-7296 • **www.versamatic.com**

© Copyright 2019
Warren Rupp, Inc. All rights reserved

VIPTech Distribution Germany & Austria: VIPTech GmbH · Lessingstraße 12 · 72663 Großbettlingen · Germany
Phone +49 7022 948735 · info@viptech.net · www.viptech.net · Shop & spare parts: aodd-pumpen.de

Safety Information

⚠ IMPORTANT



Read the safety warnings and instructions in this manual before pump installation and start-up. Failure to comply with the recommendations stated in this manual could damage the pump and void factory warranty.



When the pump is used for materials that tend to settle out or solidify, the pump should be flushed after each use to prevent damage. In freezing temperatures the pump should be completely drained between uses.

⚠ CAUTION



Before pump operation, inspect all fasteners for loosening caused by gasket creep. Retighten loose fasteners to prevent leakage. Follow recommended torques stated in this manual.



Plastic pumps and plastic components are not UV stabilized. Ultraviolet radiation can damage these parts and negatively affect material properties. Do not expose to UV light for extended periods of time.



WARNING
Pump not designed, tested or certified to be powered by compressed natural gas. Powering the pump with natural gas will void the warranty.



WARNING
The use of non-OEM replacement parts will void (or negate) agency certifications, including CE, ATEX, CSA, 3A and EC1935 compliance (Food Contact Materials). Warren Rupp, Inc. cannot ensure nor warrant non-OEM parts to meet the stringent requirements of the certifying agencies.

⚠ WARNING



When used for toxic or aggressive fluids, the pump should always be flushed clean prior to disassembly.



Before maintenance or repair, shut off the compressed air line, bleed the pressure, and disconnect the air line from the pump. Be certain that approved eye protection and protective clothing are worn at all times. Failure to follow these recommendations may result in serious injury or death.



Airborne particles and loud noise hazards. Wear eye and ear protection.



In the event of diaphragm rupture, pumped material may enter the air end of the pump, and be discharged into the atmosphere. If pumping a product that is hazardous or toxic, the air exhaust must be piped to an appropriate area for safe containment.



Take action to prevent static sparking. Fire or explosion can result, especially when handling flammable liquids. The pump, piping, valves, containers and other miscellaneous equipment must be properly grounded.



This pump is pressurized internally with air pressure during operation. Make certain that all fasteners and piping connections are in good condition and are reinstalled properly during reassembly.



Use safe practices when lifting

ATEX Pumps - Conditions For Safe Use

1. Ambient temperature range is as specified in tables 1 & 2 on the next page

2. ATEX compliant pumps are suitable for use in explosive atmospheres when the equipment is properly grounded in accordance with local electrical codes

3. Conductive Polypropylene, conductive Acetal or conductive PVDF pumps are not to be installed in applications where the pumps may be subjected to oil, greases and hydraulic liquids.

4. When operating pumps equipped with non-conductive diaphragms that exceed the maximum permissible projected area, as defined in EN ISO 80079-36 : 2016 section 6.7.5 table 8, the following protection methods must be applied
   - Equipment is always used to transfer electrically conductive fluids or
   - Explosive environment is prevented from entering the internal portions of the pump, i.e. dry running.

VIPTech Distribution Germany & Austria: VIPTech GmbH · Lessingstraße 12 · 72663 Großbettlingen · Germany
Phone +49 7022 948735 · info@viptech.net · www.viptech.net · Shop & spare parts: aodd-pumpen.de

Temperature Tables

Table 1. Category 2 ATEX Rated Pumps

Ambient Temperature Range [°C]	Process Temperature Range [°C]	Temperature Class	Maximum Surface Temperature [°C]
-20°C to +60°C	-40°C to +80°C	T5	T100°C
	-40°C to +108°C	T4	T135°C
	-40°C to + 160°C	T3	T200°C
	-40°C to +177°C	(225°C) T2	

Table 2. Category M2 ATEX Rated Pumps for Mining

Ambient Temperature Range [°C]	Process Temperature Range [°C]
-20°C to +60°C	-40°C to +150°C

Note: The ambient temperature range and the process temperature range should not exceed the operating temperature range of the applied plastic parts as listed in the manuals of the pumps.

VIPTech Distribution Germany & Austria: VIPTech GmbH · Lessingstraße 12 · 72663 Großbettlingen · Germany
Phone +49 7022 948735 · info@viptech.net · www.viptech.net · Shop & spare parts: aodd-pumpen.de

Table of Contents

SECTION 1: PUMP SPECIFICATIONS.....1

- Nomenclature
- Performance
- Materials
- Dimensional Drawings

SECTION 2: INSTALLATION & OPERATION ...8

- Principle of Pump Operation
- Typical Installation Guide
- Troubleshooting

SECTION 3: EXPLODED VIEW.....11

- Composite Drawings
- Parts List
- Materials Code

SECTION 4: WARRANTY & CERTIFICATES ..14

- Warranty
- EU Declaration of Conformity - Machinery Directive
- EU Declaration of Conformity - ATEX Directive

VIPTech Distribution Germany & Austria: VIPTech GmbH · Lessingstraße 12 · 72663 Großbettlingen · Germany
Phone +49 7022 948735 · info@viptech.net · www.viptech.net · Shop & spare parts: aodd-pumpen.de

Explanation of Pump Nomenclature

Your Serial #: *(fill in from pump nameplate)* _____

Your Model #:
(fill in from pump nameplate)

Model #: X X X X X X X X X X X X X

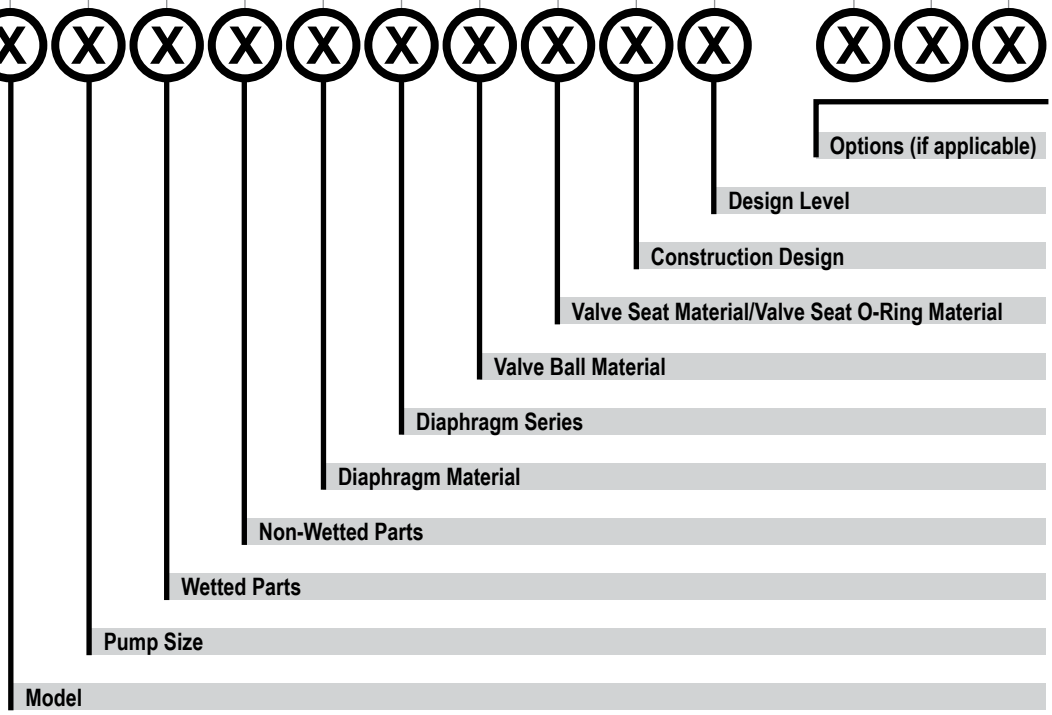

Model
E Elima-Matic

Pump Size
5 1/2"

Wetted Parts
A Aluminum
S Stainless Steel
H Alloy C

Non-Wetted Parts
A Aluminum

Diaphragm Material / Series
1R Neoprene Rugged
2R Nitrile Rugged
3R (FKM) Fluorcarbon Rugged
4R EPDM Rugged
5T PTFE Tef-Matic (2 piece)
6X Santoprene (XL) Thermo-Matic
7X Hytrel Thermo-Matic

Valve Ball Material Valve
1 Neoprene
2 Nitrile
3 (FKM) Fluorocarbon
4 EPDM
5 PTFE
6 Santoprene XL
7 Hytrel
S Stainless Steel

Seat/Valve Seat O-Ring Material
5 PTFE

Construction Design
9 Bolted

Design Level
A
C

Miscellaneous Options
ATEX ATEX Compliant

*More than one option may be specified for a particular pump model.

VIPTech Distribution Germany & Austria: VIPTech GmbH · Lessingstraße 12 · 72663 Großbettlingen · Germany
Phone +49 7022 948735 · info@viptech.net · www.viptech.net · Shop & spare parts: aodd-pumpen.de

Materials

Material Profile:	Operating Temperatures:	
⚠ *CAUTION! Operating temperature limitations are as follows:*	Max.	Min.
Conductive Acetal: Tough, impact resistant, ductile. Good abrasion resistance and low friction surface. Generally inert, with good chemical resistance except for strong acids and oxidizing agents.	190°F 88°C	-20°F -29°C
EPDM: Shows very good water and chemical resistance. Has poor resistance to oils and solvents, but is fair in ketones and alcohols.	280°F 138°C	-40°F -40°C
FKM: (Fluorocarbon) Shows good resistance to a wide range of oils and sovents; especially all aliphatic, aromatic and halogenated hydrocarbons, acids, animal and vegetable oils. Hot water or hot aqueous solutions (over 70°F) will attack FKM.	350°F 177°C	-40°F -40°C
Hytrel®: Good on acids, bases, amines and glycols at room temperatures only.	220°F 104°C	-20°F -29°C
Neoprene: All purpose. Resistance to vegetable oils. Generally not affected by moderate chemicals, fats, greases and many oils and solvents. Generally attacked by strong oxidizing acids, ketones, esters and nitro hydrocarbons and chlorinated aromatic hydrocarbons.	200°F 93°C	-10°F -23°C
Nitrile: General purpose, oil-resistant. Shows good solvent, oil, water and hydraulic fluid resistance. Should not be used with highly polar solvents like acetone and MEK, ozone, chlorinated hydrocarbons and nitro hydrocarbons.	190°F 88°C	-10°F -23°C
Nylon: 6/6 High strength and toughness over a wide temperature range. Moderate to good resistance to fuels, oils and chemicals.	180°F 82°C	32°F 0°C
Polypropylene: A thermoplastic polymer. Moderate tensile and flex strength. Resists stong acids and alkali. Attacked by chlorine, fuming nitric acid and other strong oxidizing agents.	180°F 82°C	32°F 0°C
PVDF: (Polyvinylidene Fluoride) A durable fluoroplastic with excellent chemical resistance. Excellent for UV applications. High tensile strength and impact resistance.	250°F 121°C	0°F -18°C
Santoprene®: Injection molded thermoplastic elastomer with no fabric layer. Long mechanical flex life. Excellent abrasion resistance.	275°F 135°C	-40°F -40°C
UHMW PE: A thermoplastic that is highly resistant to a broad range of chemicals. Exhibits outstanding abrasion and impact resistance, along with environmental stress-cracking resistance.	180°F 82°C	-35°F -37°C
Urethane: Shows good resistance to abrasives. Has poor resistance to most solvents and oils.	150°F 66°C	32°F 0°C
Virgin PTFE: (PFA/TFE) Chemically inert, virtually impervious. Very few chemicals are known to chemically react with PTFE; molten alkali metals, turbulent liquid or gaseous fluorine and a few fluoro-chemicals such as chlorine trifluoride or oxygen difluoride which readily liberate free fluorine at elevated temperatures.	220°F 104°C	-35°F -37°C

Maximum and Minimum Temperatures are the limits for which these materials can be operated. Temperatures coupled with pressure affect the longevity of diaphragm pump components. Maximum life should not be expected at the extreme limits of the temperature ranges.

Metals:

Alloy C: Equal to ASTM494 CW-12M-1 specification for nickel and nickel alloy.
Stainless Steel: Equal to or exceeding ASTM specification A743 CF-8M for corrosion resistant iron chromium, iron chromium nickel and nickel based alloy castings for general applicaitons. Commonly referred to as 316 Stainless Steel in the pump industry.

For specific applications, always consult the Chemical Resistance Chart.

Note: This document is a high level guide. Please be aware that not all model and or material combinations are possible for all sizes. Please consult factory or your distributor for specific details.

VIPTech Distribution Germany & Austria: VIPTech GmbH · Lessingstraße 12 · 72663 Großbettlingen · Germany
Phone +49 7022 948735 · info@viptech.net · www.viptech.net · Shop & spare parts: aodd-pumpen.de

Performance

E7 3/4" Bolted Metal
Rubber and TPE Fitted

Flow Rate
Adjustable to . . . . . 0-12 gpm (45.4 lpm)
Port Size
Suction . . . . . 3/4" NPT
Discharge . . . . . 3/4" NPT
Air Inlet . . . . . 3/8" NPT
Air Exhaust . . . . . 3/8" NPT
Suction Lift
Dry . . . . . 13' (3.9 m)
Wet . . . . . 22' (6.7 m)
Max Solid Size (Diameter)
. . . . . 1/16" (1.6 mm)
Max Noise Level . . . . . 84 dB(A)
Shipping Weights
Aluminum . . . . . 11 lbs (3.9 kg)

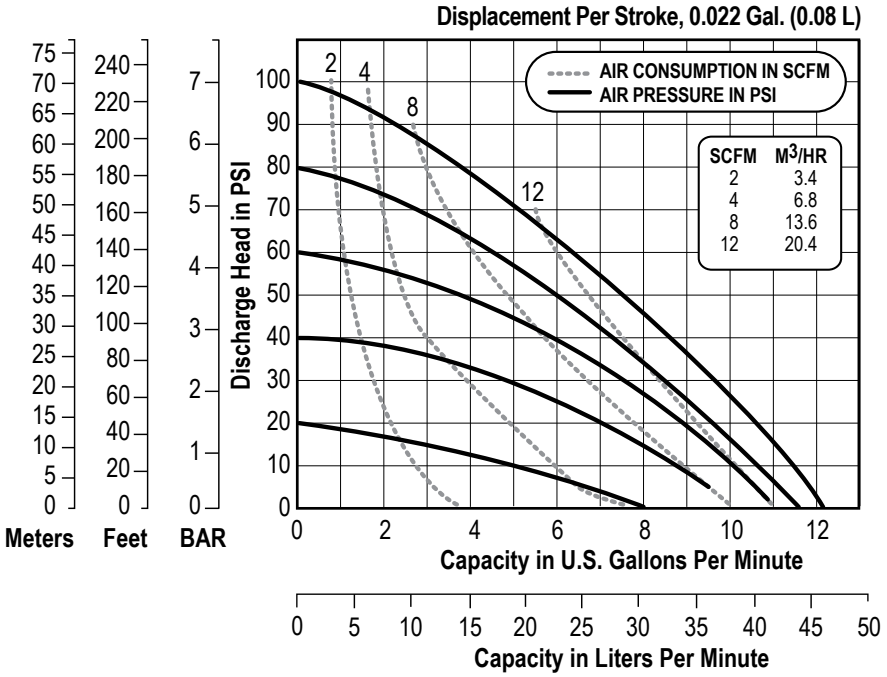

NOTE: Performance based on the following: PTFE fitted pump, flooded suction, water at ambient conditions. The use of other materials and varying hydraulic conditions may result in deviations in excess of 5%.

E7 3/4" Bolted Metal
PTFE Fitted

Flow Rate
Adjustable to . . . . . 0-11 gpm (41.6 lpm)
Port Size
Suction . . . . . 3/4" NPT
Discharge . . . . . 3/4" NPT
Air Inlet . . . . . 3/8" NPT
Air Exhaust . . . . . 3/8" NPT
Suction Lift
Dry . . . . . 12' (3.6 m)
Wet . . . . . 22' (6.7 m)
Max Solid Size (Diameter)
. . . . . 1/16" (1.6 mm)
Max Noise Level . . . . . 87 dB(A)
Shipping Weights
Aluminum . . . . . 11 lbs (3.9 kg)

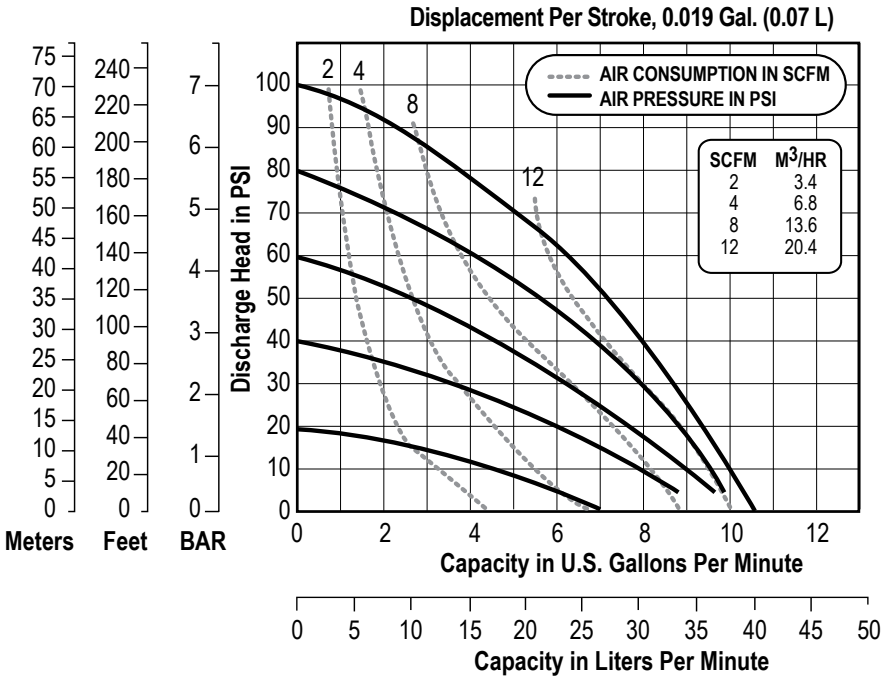

NOTE: Performance based on the following: PTFE fitted pump, flooded suction, water at ambient conditions. The use of other materials and varying hydraulic conditions may result in deviations in excess of 5%.

VIPTech Distribution Germany & Austria: VIPTech GmbH · Lessingstraße 12 · 72663 Großbettlingen · Germany
Phone +49 7022 948735 · info@viptech.net · www.viptech.net · Shop & spare parts: aodd-pumpen.de

Dimensional Drawings

E7 Bolted Metal

Dimensions in inches (mm dimensions in brackets).

The dimensions on this drawing are for reference only. A certified drawing can be requested if physical dimensions are needed.

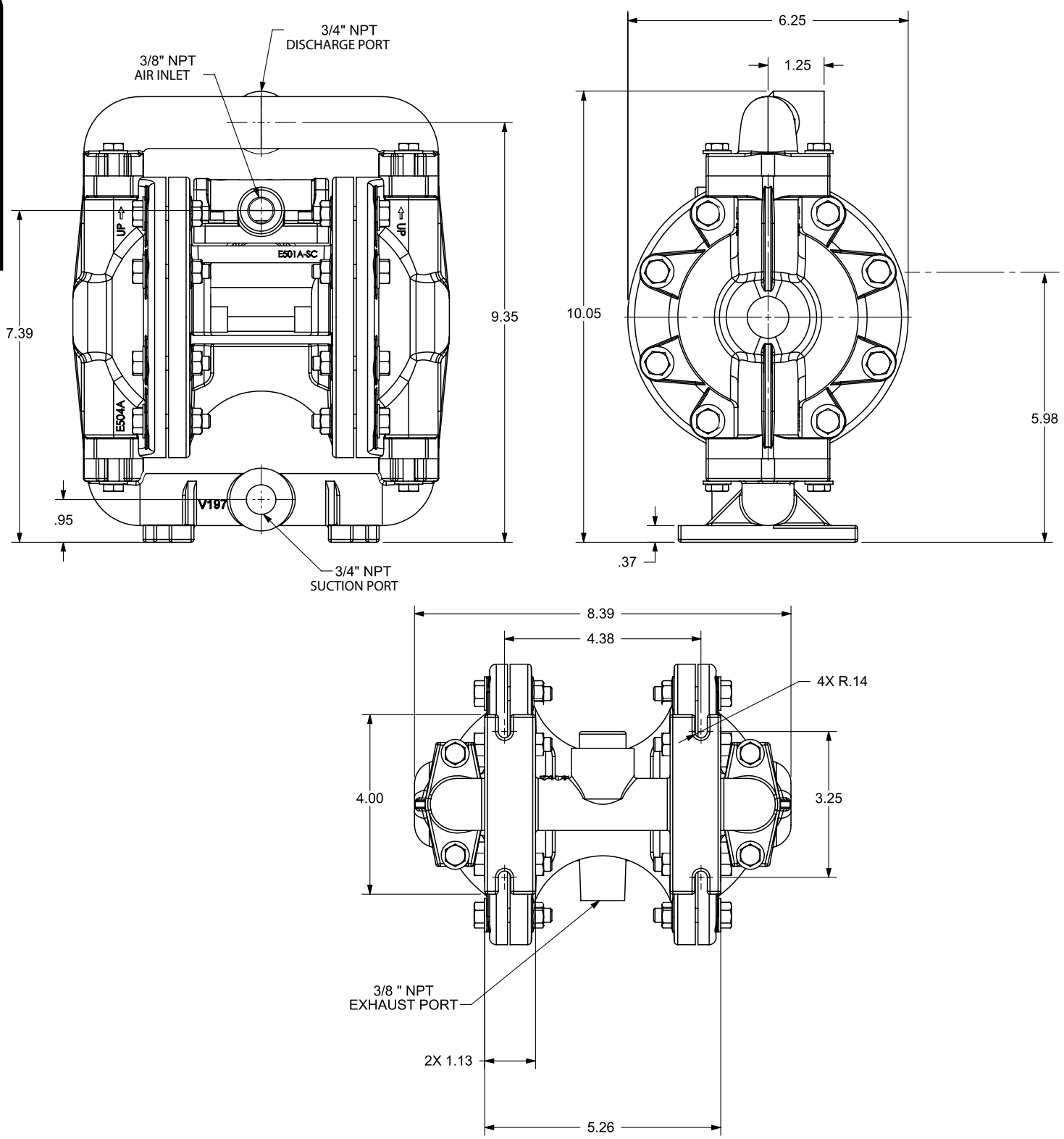

BOTTOM VIEW

VIPTech Distribution Germany & Austria: VIPTech GmbH · Lessingstraße 12 · 72663 Großbettlingen · Germany
Phone +49 7022 948735 · info@viptech.net · www.viptech.net · Shop & spare parts: aodd-pumpen.de

Principle of Pump Operation

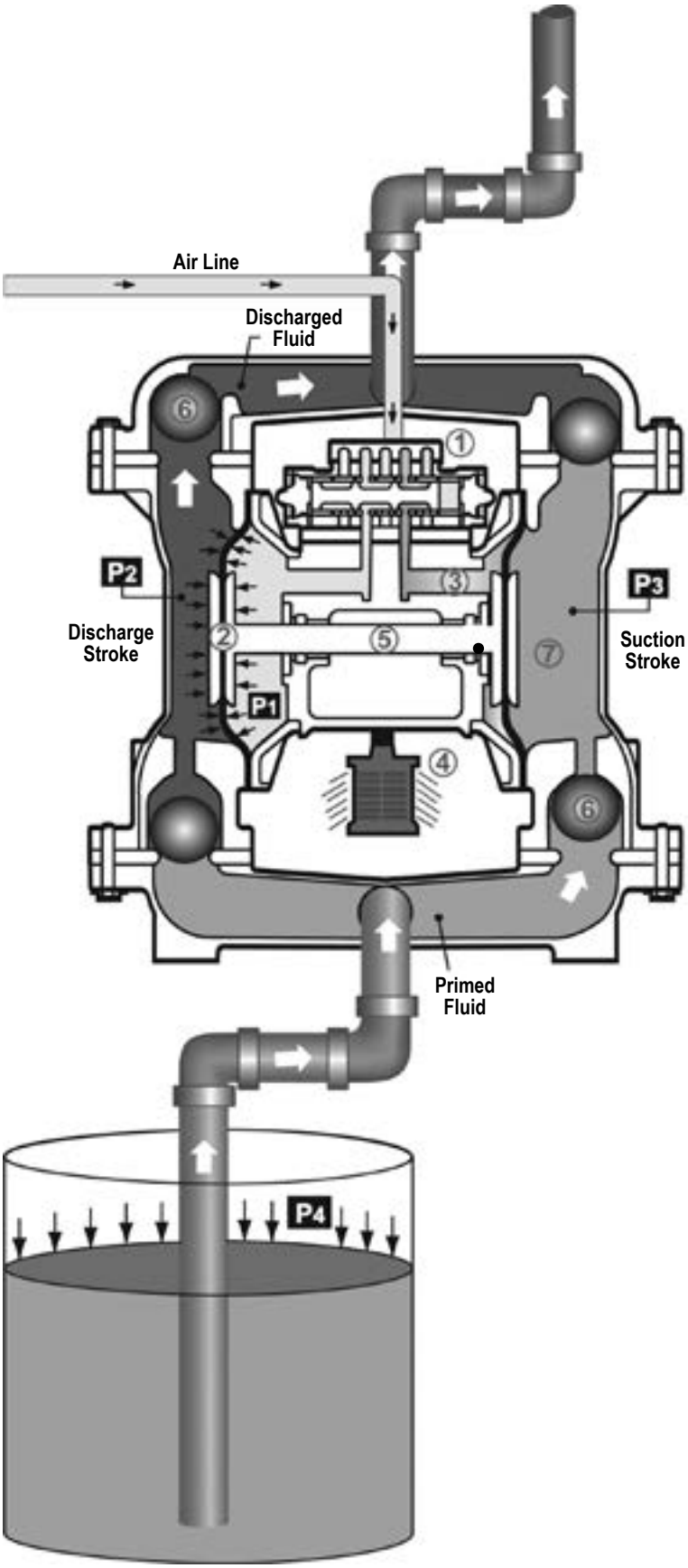

Air-Operated Double Diaphragm (AODD) pumps are powered by compressed air or nitrogen.

The main directional (air) control valve distributes compressed air to an air chamber, exerting uniform pressure over the inner surface of the diaphragm . At the same time, the exhausting air from behind the opposite diaphragm is directed through the air valve assembly(s) to an exhaust port .

As inner chamber pressure **(P1)** exceeds liquid chamber pressure **(P2)**, the rod connected diaphragms shift together creating discharge on one side and suction on the opposite side. The discharged and primed liquid's directions are controlled by the check valves (ball or flap) orientation.

The pump primes as a result of the suction stroke. The suction stroke lowers the chamber pressure **(P3)** increasing the chamber volume. This results in a pressure differential necessary for atmospheric pressure **(P4)** to push the fluid through the suction piping and across the suction side check valve and into the outer fluid chamber .

Suction (side) stroking also initiates the reciprocating (shifting, stroking or cycling) action of the pump. The suction diaphragm's movement is mechanically pulled through its stroke. The diaphragm's inner plate makes contact with an actuator plunger aligned to shift the pilot signaling valve. Once actuated, the pilot valve sends a pressure signal to the opposite end of the main directional air valve, redirecting the compressed air to the opposite inner chamber.

SUBMERGED ILLUSTRATION

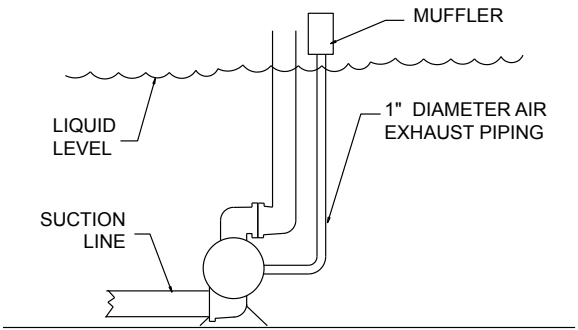

Pump can be submerged if the pump materials of construction are compatible with the liquid being pumped. The air exhaust must be piped above the liquid level. When the pumped product source is at a higher level than the pump (flooded suction condition), pipe the exhaust higher than the product source to prevent siphoning spills.

VIPTech Distribution Germany & Austria: VIPTech GmbH · Lessingstraße 12 · 72663 Großbettlingen · Germany
Phone +49 7022 948735 · info@viptech.net · www.viptech.net · Shop & spare parts: aodd-pumpen.de

Recommended Installation Guide

Available Accessories:

1. Surge Suppressor
2. Filter/Regulator
3. Air Dryer
4. Lubricator

Note: Surge Suppressor and Piping, including air line, must be supported after the flexible connections.

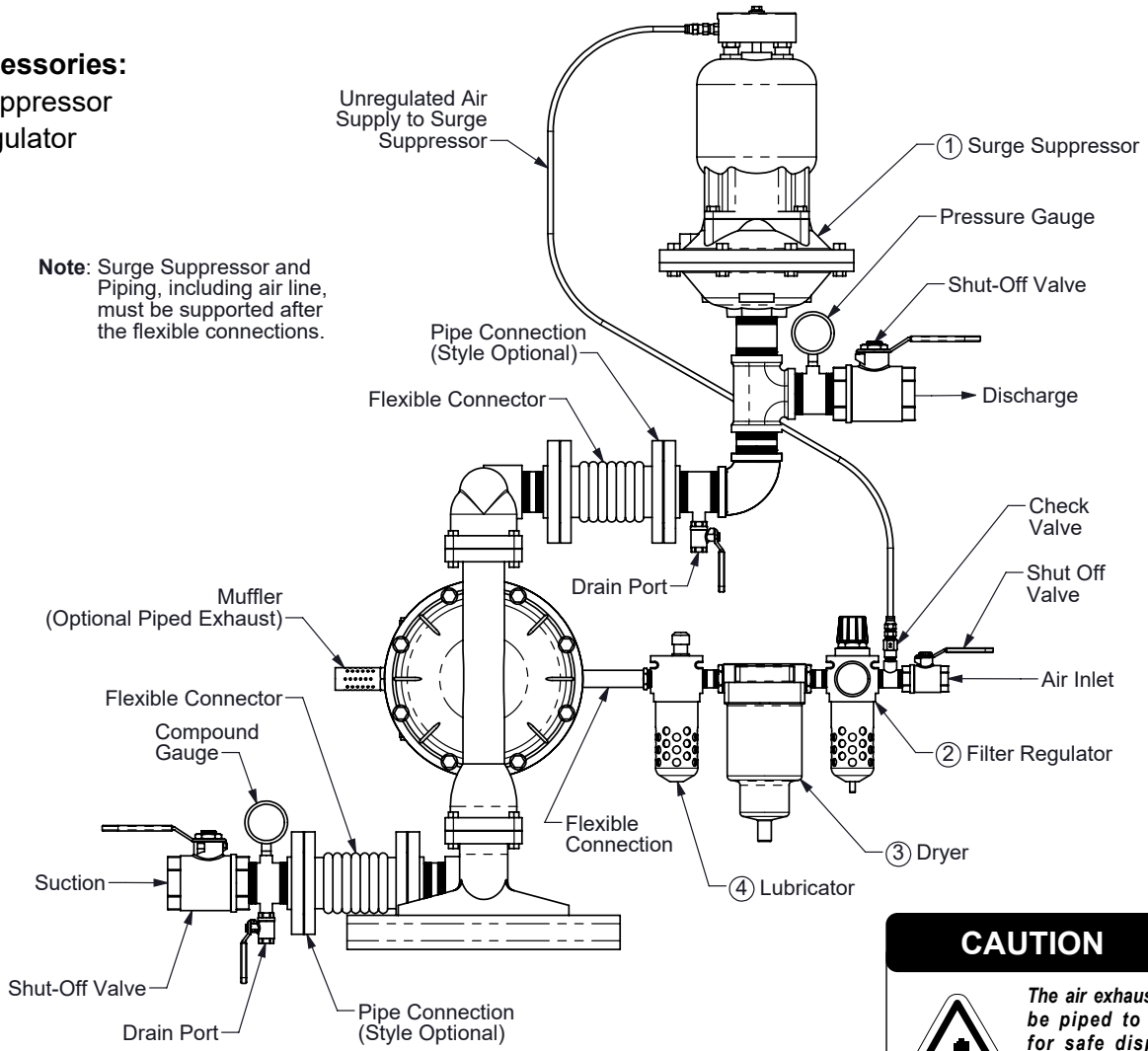

CAUTION

The air exhaust should be piped to an area for safe disposition of the product being pumped, in the event of a diaphragm failure.

Installation And Start-Up

Locate the pump as close to the product being pumped as possible. Keep the suction line length and number of fittings to a minimum. Do not reduce the suction line diameter.

Air Supply

Connect the pump air inlet to an air supply with sufficient capacity and pressure to achieve desired performance. A pressure regulating valve should be installed to insure air supply pressure does not exceed recommended limits.

Air Valve Lubrication

The air distribution system is designed to operate WITHOUT lubrication. This is the standard mode of operation. If lubrication is desired, install an air line lubricator set to deliver one drop of SAE 10 non-detergent oil for every 20 SCFM (9.4 liters/sec.) of air the pump consumes. Consult the Performance Curve to determine air consumption.

Air Line Moisture

Water in the compressed air supply may cause icing or freezing of the exhaust air, causing the pump to cycle erratically or stop operating. Water in the air supply can be reduced by using a point-of-use air dryer.

Air Inlet And Priming

To start the pump, slightly open the air shut-off valve. After the pump primes, the air valve can be opened to increase air flow as desired. If opening the valve increases cycling rate, but does not increase the rate of flow, cavitation has occurred. The valve should be closed slightly to obtain the most efficient air flow to pump flow ratio.

VIPTech Distribution Germany & Austria: VIPTech GmbH · Lessingstraße 12 · 72663 Großbettlingen · Germany
Phone +49 7022 948735 · info@viptech.net · www.viptech.net · Shop & spare parts: aodd-pumpen.de

Troubleshooting Guide

Symptom:	Potential Cause(s):	Recommendation(s):
Pump Cycles Once	Deadhead (system pressure meets or exceeds air supply pressure).	Increase the inlet air pressure to the pump. Pump is designed for 1:1 pressure ratio at zero flow. (Does not apply to high pressure 2:1 units).
	Air valve or intermediate gaskets installed incorrectly.	Install gaskets with holes properly aligned.
	Bent or missing actuator plunger.	Remove pilot valve and inspect actuator plungers.
Pump Will Not Operate / Cycle	Pump is over lubricated.	Set lubricator on lowest possible setting or remove. Units are designed for lube free operation.
	Lack of air (line size, PSI, CFM).	Check the air line size and length, compressor capacity (HP vs. cfm required).
	Check air distribution system.	Disassemble and inspect main air distribution valve, pilot valve and pilot valve actuators.
	Discharge line is blocked or clogged manifolds.	Check for inadvertently closed discharge line valves. Clean discharge manifolds/piping.
	Deadhead (system pressure meets or exceeds air supply pressure).	Increase the inlet air pressure to the pump. Pump is designed for 1:1 pressure ratio at zero flow. (Does not apply to high pressure 2:1 units).
	Blocked air exhaust muffler.	Remove muffler screen, clean or de-ice, and re-install.
	Pumped fluid in air exhaust muffler.	Disassemble pump chambers. Inspect for diaphragm rupture or loose diaphragm plate assembly.
	Pump chamber is blocked.	Disassemble and inspect wetted chambers. Remove or flush any obstructions.
Pump Cycles and Will Not Prime or No Flow	Cavitation on suction side.	Check suction condition (move pump closer to product).
	Check valve obstructed. Valve ball(s) not seating properly or sticking.	Disassemble the wet end of the pump and manually dislodge obstruction in the check valve pocket. Clean out around valve ball cage and valve seat area. Replace valve ball or valve seat if damaged. Use heavier valve ball material.
	Valve ball(s) missing (pushed into chamber or manifold).	Worn valve ball or valve seat. Worn fingers in valve ball cage (replace part). Check Chemical Resistance Guide for compatibility.
	Valve ball(s)/seat(s) damaged or attacked by product.	Check Chemical Resistance Guide for compatibility.
	Check valve and/or seat is worn or needs adjusting.	Inspect check valves and seats for wear and proper setting. Replace if necessary.
	Suction line is blocked.	Remove or flush obstruction. Check and clear all suction screens or strainers.
	Excessive suction lift.	For lifts exceeding 20' of liquid, filling the chambers with liquid will prime the pump in most cases.
	Suction side air leakage or air in product.	Visually inspect all suction-side gaskets and pipe connections.
	Pumped fluid in air exhaust muffler.	Disassemble pump chambers. Inspect for diaphragm rupture or loose diaphragm plate assembly.
Pump Cycles Running Sluggish/Stalling, Flow Unsatisfactory	Over lubrication.	Set lubricator on lowest possible setting or remove. Units are designed for lube free operation.
	Icing.	Remove muffler screen, de-ice, and re-install. Install a point of use air drier.
	Clogged manifolds.	Clean manifolds to allow proper air flow
	Deadhead (system pressure meets or exceeds air supply pressure).	Increase the inlet air pressure to the pump. Pump is designed for 1:1 pressure ratio at zero flow. (Does not apply to high pressure 2:1 units).
	Cavitation on suction side.	Check suction (move pump closer to product).
	Lack of air (line size, PSI, CFM).	Check the air line size, length, compressor capacity.
	Excessive suction lift.	For lifts exceeding 20' of liquid, filling the chambers with liquid will prime the pump in most cases.
	Air supply pressure or volume exceeds system hd.	Decrease inlet air (press. and vol.) to the pump. Pump is cavitating the fluid by fast cycling.
	Undersized suction line.	Meet or exceed pump connections.
	Restrictive or undersized air line.	Install a larger air line and connection.
	Suction side air leakage or air in product.	Visually inspect all suction-side gaskets and pipe connections.
	Suction line is blocked.	Remove or flush obstruction. Check and clear all suction screens or strainers.
	Pumped fluid in air exhaust muffler.	Disassemble pump chambers. Inspect for diaphragm rupture or loose diaphragm plate assembly.
	Check valve obstructed.	Disassemble the wet end of the pump and manually dislodge obstruction in the check valve pocket.
	Check valve and/or seat is worn or needs adjusting.	Inspect check valves and seats for wear and proper setting. Replace if necessary.
	Entrained air or vapor lock in chamber(s).	Purge chambers through tapped chamber vent plugs. Purging the chambers of air can be dangerous.
Product Leaking Through Exhaust	Diaphragm failure, or diaphragm plates loose.	Replace diaphragms, check for damage and ensure diaphragm plates are tight.
	Diaphragm stretched around center hole or bolt holes.	Check for excessive inlet pressure or air pressure. Consult Chemical Resistance Chart for compatibility with products, cleaners, temperature limitations and lubrication.
Premature Diaphragm Failure	Cavitation.	Enlarge pipe diameter on suction side of pump.
	Excessive flooded suction pressure.	Move pump closer to product. Raise pump/place pump on top of tank to reduce inlet pressure. Install Back pressure device (Tech bulletin 41r). Add accumulation tank or pulsation dampener.
	Misapplication (chemical/physical incompatibility).	Consult Chemical Resistance Chart for compatibility with products, cleaners, temperature limitations and lubrication.
	Incorrect diaphragm plates or plates on backwards, installed incorrectly or worn.	Check Operating Manual to check for correct part and installation. Ensure outer plates have not been worn to a sharp edge.
Unbalanced Cycling	Excessive suction lift.	For lifts exceeding 20' of liquid, filling the chambers with liquid will prime the pump in most cases.
	Undersized suction line.	Meet or exceed pump connections.
	Pumped fluid in air exhaust muffler.	Disassemble pump chambers. Inspect for diaphragm rupture or loose diaphragm plate assembly.
	Suction side air leakage or air in product.	Visually inspect all suction-side gaskets and pipe connections.
	Check valve obstructed.	Disassemble the wet end of the pump and manually dislodge obstruction in the check valve pocket.
	Check valve and/or seat is worn or needs adjusting.	Inspect check valves and seats for wear and proper setting. Replace if necessary.
	Entrained air or vapor lock in chamber(s).	Purge chambers through tapped chamber vent plugs.

For additional troubleshooting tips contact After Sales Support at service.warrenrupp@idexcorp.com or 419-524-8388

VIPTech Distribution Germany & Austria: VIPTech GmbH · Lessingstraße 12 · 72663 Großbettlingen · Germany
Phone +49 7022 948735 · info@viptech.net · www.viptech.net · Shop & spare parts: aodd-pumpen.de

Composite Repair Parts Drawing

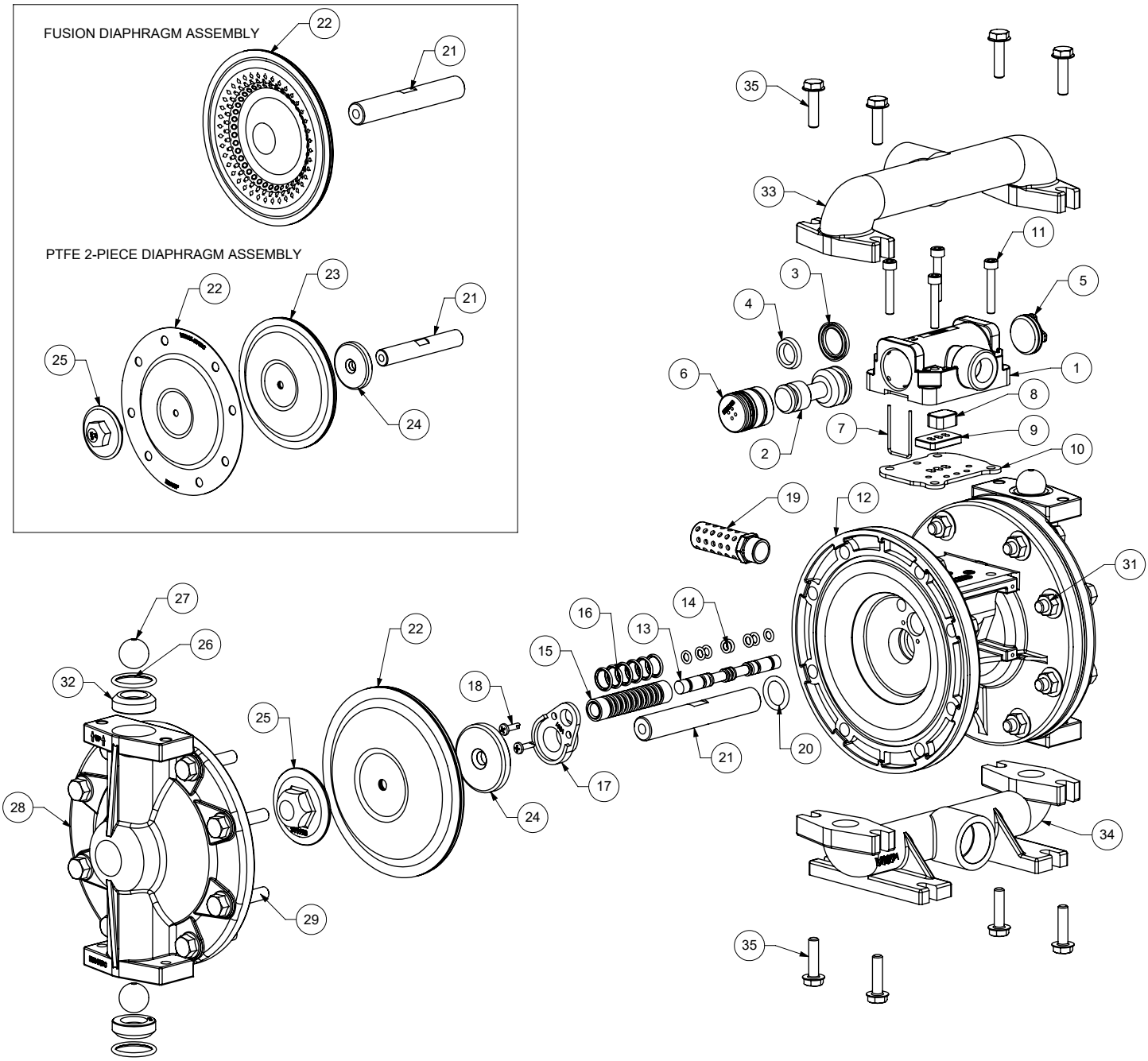

VIPTech Distribution Germany & Austria: VIPTech GmbH · Lessingstraße 12 · 72663 Großbettlingen · Germany
Phone +49 7022 948735 · info@viptech.net · www.viptech.net · Shop & spare parts: aodd-pumpen.de

Composite Repair Parts List

Air Valve Assembly			
Item #	**Qty.**	**Description**	**Part Number**
		Air Side Repair Kit (Includes Items 3,4,6, 8-10,13-17,20)	476.V007.000
-	1	Valve Body (includes items 1-11)	031.V004.557
1	1	Valve Body	PE500A - ATEX
2	1	Valve Spool Assembly (Includes items 3&4)	E500BUB ASY
3	1	Large Valve Spool U-Cup	P98-104A
4	1	Small Valve Spool U-Cup	P98-104AUB
5	1	End Cap Assembly (Includes O-Ring)	E500D - ATEX
6	1	Reducing End Cap Assembly (Includes 560.0580.360 O-rings)	E500DUB ASY
7	2	Staple	E500F
8	1	CT Air Diverter	10-075
9	1	Air Diverter Plate	E500H
10	1	Air Valve Gasket	360.V003.360
11	4	Valve Mounting Screws	S1004

Center Section Assembly			
Item #	**Qty.**	**Description**	**Part Number**
			Aluminum
12	1	Center Section	E501A-SC
		Pilot Repair Kit (Includes Items 13-17)	476.V006.000
13	1	Pilot Spool ASY (Includes Item #14)	775.V003.000
14	8	Pilot Spool O-Rings	560.023.358
15	1	Pilot Valve Sleeve ASY (Includes Item #16)	755.V003.000
16	6	Pilot Valve Sleeve O-Rings	560.033.358
17	2	Shaft/Pilot Retainer	670.V001.554
18	4	Retainer Screw	E501C
19	1	Muffler	530.061.000

Diaphragm Assembly / Elastomers					
Item #	**Qty.**	**Description**	**Part Number**		
			TPE/RUBBER	**PTFE 2-Piece**	**PTFE Fusion**
20	2	Main Shaft O-Ring	E502B		
21	1	Main Shaft	E502A		
22	2	Diaphragm	"E505xx (See Below Material Chart)"	E505TF	E505F
23	2	Back-Up Diaphragm	N/A	E505N	N/A
24	2	Inner Diaphragm Plate	V199C		N/A
25	2	Outer Diaphragm Plate	SV199B	171.064.115	N/A
26	4	Valve Seat O-Ring	"V110xx (See Below Material Chart)"	E110TEV, E110TES	
27	4	Valve Ball	"V111xx (See Below Material Chart)"	V111SS, V111TF	

Wet End Assembly			
Item #	**Qty.**	**Description**	**Part Number**
			Aluminum
28	2	Water Chamber	E504A
29	16	Water Chamber Bolt	171.064.115
31	16	Water Chamber Nut	SV185B
32	4	Valve Seat	V110A
33	1	Discharge Manifold	V196A
34	1	Suction Manifold	V197A
35	8	Manifold Bolts	171.065.115

Elastomer Material Specifications			
Material	**Diaphragm P/N**	**Valve Ball P/N**	**O-Ring P/N**
Neoprene	E505N	N/A	N/A
Buna Nitrile	E505BN	V111BN	V110BN
Viton	E505VT	V111VT	V110VT
Nordel	E505ND	N/A	V110ND
Santoprene	E505XL	V111TPEXL	V110XL
Stainless Steel	N/A	V111SS	N/A

VIPTech Distribution Germany & Austria: VIPTech GmbH · Lessingstraße 12 · 72663 Großbettlingen · Germany
Phone +49 7022 948735 · info@viptech.net · www.viptech.net · Shop & spare parts: aodd-pumpen.de

Material Codes - The Last 3 Digits of Part Number

000.....Assembly, sub-assembly;
and some purchased items
010.....Cast Iron
015.....Ductile Iron
020.....Ferritic Malleable Iron
080.....Carbon Steel, AISI B-1112
110.....Alloy Type 316 Stainless Steel
111.....Alloy Type 316 Stainless Steel
(Electro Polished)
112.....Alloy C
113.....Alloy Type 316 Stainless Steel
(Hand Polished)
114.....303 Stainless Steel
115.....302/304 Stainless Steel
117.....440-C Stainless Steel (Martensitic)
120.....416 Stainless Steel
(Wrought Martensitic)
148.....Hardcoat Anodized Aluminum
150.....6061-T6 Aluminum
152.....2024-T4 Aluminum (2023-T351)
155.....356-T6 Aluminum
156.....356-T6 Aluminum
157.....Die Cast Aluminum Alloy #380
158.....Aluminum Alloy SR-319
162.....Brass, Yellow, Screw Machine Stock
165.....Cast Bronze, 85-5-5-5
166.....Bronze, SAE 660
170.....Bronze, Bearing Type,
Oil Impregnated
180.....Copper Alloy
305.....Carbon Steel, Black Epoxy Coated
306.....Carbon Steel, Black PTFE Coated
307.....Aluminum, Black Epoxy Coated
308.....Stainless Steel, Black PTFE Coated
309.....Aluminum, Black PTFE Coated
313.....Aluminum, White Epoxy Coated
330.....Zinc Plated Steel
332.....Aluminum, Electroless Nickel Plated
333.....Carbon Steel, Electroless
Nickel Plated
335.....Galvanized Steel
337.....Silver Plated Steel
351.....Food Grade Santoprene®
353.....Geolast; Color: Black
354.....Injection Molded #203-40
Santoprene® Duro 40D +/-5;
Color: RED
356.....Hytrel®
357.....Injection Molded Polyurethane
358.....Urethane Rubber
(Some Applications)
(Compression Mold)
359.....Urethane Rubber
360.....Nitrile Rubber Color coded: RED
363.....FKM (Fluorocarbon)
Color coded: YELLOW
364.....EPDM Rubber
Color coded: BLUE
365.....Neoprene Rubber
Color coded: GREEN
366.....Food Grade Nitrile
368.....Food Grade EPDM
371.....Philthane (Tuftane)
374.....Carboxylated Nitrile
375.....Fluorinated Nitrile
378.....High Density Polypropylene
379.....Conductive Nitrile
408.....Cork and Neoprene
425.....Compressed Fibre
426.....Blue Gard
440.....Vegetable Fibre
500.....Delrin® 500
502.....Conductive Acetal, ESD-800
503.....Conductive Acetal, Glass-Filled
506.....Delrin® 150
520.....Injection Molded PVDF
Natural color
540.....Nylon
542.....Nylon
544.....Nylon Injection Molded
550.....Polyethylene
551.....Glass Filled Polypropylene
552.....Unfilled Polypropylene
555.....Polyvinyl Chloride
556.....Black Vinyl
558.....Conductive HDPE
570.....Rulon II®
580.....Ryton®
600.....PTFE (virgin material)
Tetrafluorocarbon (TFE)
603.....Blue Gylon®
604.....PTFE
606.....PTFE
607.....Envelon
608.....Conductive PTFE
610.....PTFE Encapsulated Silicon
611.....PTFE Encapsulated FKM
632.....Neoprene/Hytrel®
633.....FKM/PTFE
634.....EPDM/PTFE
635.....Neoprene/PTFE
637.....PTFE, FKM/PTFE
638.....PTFE, Hytrel®/PTFE
639.....Nitrile/TFE
643.....Santoprene®/EPDM
644.....Santoprene®/PTFE
656.....Santoprene® Diaphragm and
Check Balls/EPDM Seats
661.....EPDM/Santoprene®
666.....FDA Nitrile Diaphragm,
PTFE Overlay, Balls, and Seals
668.....PTFE, FDA Santoprene®/PTFE

- Delrin and Hytrel are registered tradenames of E.I. DuPont.
- Nylatron is a registered tradename of Polymer Corp.
- Gylon is a registered tradename of Garlock, Inc.
- Santoprene is a registered tradename of Exxon Mobil Corp.
- Rulon II is a registered tradename of Dixion Industries Corp.
- Ryton is a registered tradename of Phillips Chemical Co.
- Valox is a registered tradename of General Electric Co.

RECYCLING

Warren Rupp, manufacturer of Versamatic, is an ISO14001 registered company and is committed to minimizing the impact our products have on the environment. Many components of Versamatic® AODD pumps are made of recyclable materials. We encourage pump users to recycle worn out parts and pumps whenever possible, after any hazardous pumped fluids are thoroughly flushed. Pump users that recycle will gain the satisfaction to know that their discarded part(s) or pump will not end up in a landfill. The recyclability of Versamatic products is a vital part of Warren Rupp's commitment to environmental stewardship.

VIPTech Distribution Germany & Austria: VIPTech GmbH · Lessingstraße 12 · 72663 Großbettlingen · Germany
Phone +49 7022 948735 · info@viptech.net · www.viptech.net · Shop & spare parts: aodd-pumpen.de

5 - YEAR Limited Product Warranty

Quality System ISO9001 Certified • Environmental Management Systems ISO14001 Certified

Versamatic warrants to the original end-use purchaser that no product sold by Versamatic that bears a Versamatic brand shall fail under normal use and service due to a defect in material or workmanship within five years from the date of shipment from Versamatic's factory.

The use of non-OEM replacement parts will void (or negate) agency certifications, including CE, ATEX, CSA, 3A and EC1935 compliance (Food Contact Materials). Warren Rupp, Inc. cannot ensure nor warrant non-OEM parts to meet the stringent requirements of the certifying agencies.

~ See complete warranty at http://vm.salesmrc.com/pdfs/VM_Product_Warranty.pdf

VERSAMATIC®

EC Declaration of Conformity

Manufacturer:
Warren Rupp, Inc.
800 N. Main Street
Mansfield, Ohio, 44902 USA

Certifies that Air-Operated Double Diaphragm Pump Models: E Series, VL Series, VM Series, U2 Series; Submersible Pump Models: VSMA3 Series, SPA15 Series and Surge Dampener/Suppressor Models: VDA Series, VTA Series comply with the European Community Directive 2006/42/EC on Machinery, according to Annex VIII. This product has used Harmonized Standard EN809:2012, Pumps and Pump Units for Liquids - Common Safety Requirements, to verify conformance.

October 3, 2022
DATE/APPROVAL/TITLE:

Technical File on record with:
DEKRA Certification B.V.
Meander 1051
6825 MJ Arnhem
The Netherlands

Signature of authorized person

Dennis Hall
Printed name of authorized person

Engineering Manager
Title

IDEX

CE

VIPTech Distribution Germany & Austria: VIPTech GmbH · Lessingstraße 12 · 72663 Großbettlingen · Germany
Phone +49 7022 948735 · info@viptech.net · www.viptech.net · Shop & spare parts: aodd-pumpen.de

EC Declaration of Conformity

Manufacturer:
Warren Rupp, Inc.
800 N. Main Street
Mansfield, Ohio, 44902 USA

Certifies that Air-Operated Double Diaphragm Pump Models: E Series, VL Series, VM Series, U2 Series; Submersible Pump Models: VSMA3 Series, SPA15 Series and Surge Dampener/Suppressor Models: VDA Series, VTA Series comply with the United Kingdom Statutory Instruments 2008 No. 1597, The Supply of Machinery (Safety) Regulations 2008, according to Annex VIII. This product has used Designated Standard EN809:2012, Pumps and Pump Units for Liquids - Common Safety Requirements, to verify conformance.

October 17, 2022
DATE/APPROVAL/TITLE:

Technical File on record with:
DEKRA Certification UK Limited
Stokenchurch House
Oxford Road
Stokenchurch
HP14 3SX

Signature of authorized person

Dennis Hall
Printed name of authorized person

Engineering Manager
Title

SCAN ME
Register Your Pump

VIPTech Distribution Germany & Austria: VIPTech GmbH · Lessingstraße 12 · 72663 Großbettlingen · Germany
Phone +49 7022 948735 · info@viptech.net · www.viptech.net · Shop & spare parts: aodd-pumpen.de

VERSAMATIC®

ATEX

IDEX

EU Declaration of Conformity

Manufacturer:
Warren Rupp, Inc.
A Unit of IDEX Corporation
800 North Main Street
Mansfield, OH 44902 USA

This declaration of conformity is issued under the sole responsibility of the manufacturer. Warren Rupp, Inc. declares that Air Operated Double Diaphragm Pumps (AODD) and Surge Suppressors listed below comply with the requirements of Directive **2014/34/EU** and applicable harmonized standards.

Harmonized Standards:
- EN ISO 80079-36: 2016
- EN ISO 80079-37: 2016

1. AODD Pumps and Surge Suppressors - Technical File on record with: DEKRA Certification B.V.
Meander 1051
6825 MJ Arnhem
The Netherlands

Hazardous Location Applied:



II 2 G Ex h IIC T5...225°C (T2) Gb
II 2 D Ex h IIIC T100°C...T200°C Db
- Metal pump models with external aluminum components (E-series, VL Series, VMD Series)
- Versa-Surge® surge suppressors (VTA-Series)



I M2 Ex h Mb
II 2 G Ex h IIC T5...225°C (T2) Gb
II 2 D Ex h IIIC T100°C...T200°C Db
- Metal pump models with no external aluminum (E-Series)
- Conductive plastic pumps (E-Series, VMV Series Plastic)



II 2 G Ex h IIB T5...225°C (T2) Gb
II 2 D Ex h IIIB T100°C...T200°C Db
- E1 HP & E2 HP Series due to the projected area of non-conductive external air hoses

2. AODD Pumps - EU Type Examination Certificate No.: DEKRA 18ATEX0094X - DEKRA Certification B.V. (0344)
Meander 1051
6825 MJ Arnhem
The Netherlands

Hazardous Location Applied:



I M1 Ex h I Ma
II 1 G Ex h IIC T5...225°C (T2) Ga
II 1 D Ex h IIIC T100°C...T200°C Da
- Conductive plastic pumps equipped with conductive muffler (VMV Series)

➢ See “Safety Information” page for conditions of safe use

DATE/APPROVAL/TITLE:
9 NOV 2023

Dennis Hall
Engineering Manager

VM_DofC_ATEX_MetallicAndNon-Metallic_V_Rev1123

VERSAMATIC®

UKEx

EU Declaration of Conformity

Manufacturer:
Warren Rupp, Inc.
A Unit of IDEX Corporation
800 North Main Street
Mansfield, OH 44902 USA

This declaration of conformity is issued under the sole responsibility of the manufacturer.
Warren Rupp, Inc declares that Air Operated Double Diaphragm Pumps (AODD) and Surge Suppressors listed below comply with the requirements of United Kingdom Statutory Instruments **2016 No. 1107** and all the applicable standards.

Designated Standards:
- EN ISO 80079-36: 2016
- EN ISO 80079-37: 2016

1. AODD Pumps and Surge Suppressors - Technical File on record with: DEKRA Certification UK Limited
Stokenchurch House
Oxford Road
Stokenchurch
HP14 3SX

Hazardous Location Applied:

II 2 G Ex h IIC T5...225°C (T2) Gb
II 2 D Ex h IIIC T100°C...T200°C Db
- Metal pump models with external aluminum components (E-series, VL Series, VMD Series)
- Versa-Surge® surge suppressors (VTA-Series)

I M2 Ex h Mb
II 2 G Ex h IIC T5...225°C (T2) Gb
II 2 D Ex h IIIC T100°C...T200°C Db
- Metal pump models with no external aluminum (E-Series)
- Conductive plastic pumps (E-Series, VMV Series Plastic)

II 2 G Ex h IIB T5...225°C (T2) Gb
II 2 D Ex h IIIB T100°C...T200°C Db
- E1 HP & E2 HP Series due to the projected area of non-conductive external air hoses

➢ See “Safety Information” page for conditions of safe use

DATE/APPROVAL/TITLE:
9 NOV 2023

Dennis Hall
Engineering Manager

VM_DofC_UKEx_MetallicAndNon-Metallic_V_Rev1123

VIPTech

Your partner for Versamatic AODD pumps

VM E7 Bolted-Metal Alu ATEX Service Manual

VIPTech GmbH
Lessingstraße 12
72663 Großbettlingen
Germany

Phone: +49 7022 948735
E-mail: info@viptech.net
Web: www.viptech.net
Online shop: aodd-pumpen.de

Sales, technical advice, spare parts and repair kits for Versamatic air-operated double diaphragm pumps - Germany and Austria.

aodd-pumpen.de

viptech.net

This document is the original manufacturer documentation (Warren Rupp, Inc. / Versamatic), supplemented with VIPTech contact details. Technical content unchanged.